TABLE OF CONTENTS

1. GENERAL 7

2. CONFORMITY WITH THE CE-REQUIREMENTS 8

2.1. CABLES 8

2.2. FERRITES 8

3. WIRING DIAGRAM OF THE SYSTEM 9

3.1. CABLING: TYPES, DIMENSIONS, PAIRS 10

4. ANALOG LOOP POINTS (DEVICES) 11

4.1. SENSORS AND BASES 11

4.1.1. General 11

4.1.2. Multi-sensor ACA-E 11

4.1.3. Ionisation smoke sensor AIE-E 12

4.1.4. Photoelectric smoke sensor ALG-E 12

4.1.5. Heat sensor ATG-E 12

4.1.6. Common base YBN-R/3 13

4.1.7. Short circuit isolator, base YBO-R/SCI 13

4.1.8. Loop powered base sounder CHQ-BS 14

4.1.9. Technical data 15

4.2. OTHER DEVICES 16

4.2.1. General 16

4.2.2. Mini zone module, CHQ-MZ 16

4.2.3. Zone module, CHQ-Z 18

4.2.4. Bell Module, CHQ-B 20

4.2.5. Output module, CHQ-R 22

4.2.6. Switch module, CHQ-S 23

4.2.7. Single Input / Output module, CHQ-SIO 24

4.2.8. Manual call point, MCP-E 25

5. CONVENTIONAL POINTS (DEVICES) 26

5.1. SENSORS AND BASES 26

5.1.1. General *26*

5.1.2. Photoelectric smoke sensor, SLR-E *26*

5.1.3. Photoelectric smoke sensor, SLK-EN *27*

5.1.4. Ionisation smoke sensor, SIJ-E *27*

5.1.5. Combined Rate of rise heat detector, DCD-1E (60°) *28*

5.1.6. Combined Rate of rise heat detector, DCD-R1E (90°) *28*

5.1.7. Fixed temperature heat detector, DFJ-60E (60°) *28*

5.1.8. Fixed temperature heat detector, DFJ-90E (90°) *29*

5.1.9. Waterproof fixed temperature heat detector, DFG-60E (60°) *29*

5.1.10. Common base YBN-R/4 ..... *30*

5.1.11. Common base with a remote fire led output YBO-R/5 ..... *30*

5.1.12. Common base for the SLK-EN sensor, YBF-RL/4H5 ..... *30*

5.1.13. Technical data *31*

5.2. OTHER DEVICES 33

5.2.1. Manual call point, CXL/G/R/BB *33*

5.2.2. Manual call point, KAC/G/HE *34*

5.2.3. Optical beam detector, SPB-ET *35*

5.2.4. Reflective beam detector, SRA-ET *36*

5.2.5. Smoke sensor heater, RVE *37*

6. INSTALLATION OF LOOP POINTS 38

6.1. GENERAL 38

6.2. ANALOG POINTS 39

6.2.1. A few examples *39*

6.2.2. The Analog common base YBN-R/3 ..... *41*

6.2.3. The short circuit isolator base YBO-R/SCI *42*

6.2.4. The base sounder CHQ-BS *44*

6.2.5. Mini zone module, CHQ-MZ *46*

6.2.6. Zone module, CHQ-Z *48*

Power supply for the zones 49

6.2.7. Bell Module, CHQ-B *51*

Power supply for the bell lines 54
6.2.8. Output module, CHQ-R *57*
6.2.9. Switch module, CHQ-S *59*
6.2.10. Single Input, Output module CHQ-SIO *61*
6.2.11. Manual call point, MCP-E *63*
6.2.12. Setting the address *64*
6.2.12. Setting the address *65*
The TCH-B100 address programmer 65
The 8-bit address switch 67
6.3. CONVENTIONAL POINTS 68
6.3.1. A few examples *68*
6.3.2. The common base YBN-R/4 ..... *71*
6.3.3. The common base with remote fire led output YBO-R/5 ..... *72*
6.3.4. Common base for SLK-EN sensor, YBF-RL/4H5 ..... *73*
6.3.5. Waterproof fixed temperature heat detector, DFG-60E *74*
6.3.6. Manual call point, CXL/G/R/BB *75*
6.3.7. Manual call point, KAC/G/HE *77*
6.3.8. Optical beam detector, SPB-ET *79*
6.3.9. Reflective beam detector, SRA-ET *79*
6.3.10. Smoke sensor heater, RVE *80*
7. LOOPS AND CABLES 82
7.1. GENERAL 82
7.2. MEASUREMENT OF LOOP CABLE ISOLATIONS 82
7.3. THE ANALOG LOOP 82
7.3.1. Loop cabling *82*
Different loop setups 84
7.3.2. Loop resistance *86*
Measurement by the Control panel 86
Measurement by hand 89
7.3.3. Signalling in fail state *93*

7.3.4. The ProFi-HOAN loop card *96*

7.4. THE CONVENTIONAL LINE 101

7.4.1. General *101*

7.4.2. Line cabling *101*

7.4.3. Conventional sensors in an analog loop *101*

7.4.4. The ProFi HOCO-line card *102*

8. THE CONTROL PANEL 105

8.1. INSTALLATION STEPS 105

8.2. THE PRODEX-MB, MOTHER BOARD 110

8.2.1. LBC (Low Battery Control) *110*

8.2.2. Power outputs, inputs / Fuses *111*

DC converter, DCCONV 111

8.2.3. Serial leds *114*

8.2.4. PC-connection *115*

8.2.5. SER1 serialport *115*

8.2.6. Outputs *116*

Programmable Bell / Ext output types: C, E, G, J 117

Prodex-OPCO card 117

8.2.7. Inputs *118*

8.2.7. Inputs *119*

8.3. THE PROCESSOR CARD 120

8.3.1. Language settings *121*

9. THE MAIN USER PANEL (PRODEX-MUP) 122

9.1. GENERAL 123

9.2. CABLE DIMENSIONING / VOLTAGE MEASUREMENT 123

9.3. INSTALLATION STEPS 125

9.4. CONNECTIONS / SETTINGS 129

10. CONNECTION OF FIRE ALARM DEVICES 133

10.1. GENERAL 133

10.2. THE FIRE BELL, MSB-6B/24V 134

10.2.1. Installation steps *135*

10.2.2. Connection *136*

10.3. FIRE SOUNDERS, FLASHNI, ROSHNI 138

10.3.1. Flashni sounder *138*

10.3.2. Roshni sounder *139*

Sound settings with the Dip switch 140

10.3.3. Installation steps *142*

10.3.4. Connection *143*

10.4. CABLE DIMENSIONING 145

10.4.1. Devices connected to the control panel *145*

10.4.2. Devices connected to the CHQ-B bell module *147*

Calculating the distance from the power supply to the CHQ-B Bell module: 147

Calculating the distance between the CHQ-B Bell module and the sounder device: 149

11. CONNECTION OF ROUTING EQUIPMENT 151

11.1. INSIDE THE CONTROL PANEL HOUSING 151

11.1.1. Connection *152*

11.2. OUTSIDE THE CONTROL PANEL HOUSING 153

11.2.1. Connection using Prodex-OPCO *153*

12. OTHER CONNECTIONBOARDS 155

12.1. 8 RELAY CARD, EXTOUT-8 155

13. PROCEDURES BEFORE POWER ON 156

13.1. MEASURING THE GROUND RESISTANCE 156

13.2. MEASURING THE ISOLATION RESISTANCE 158

14. TECHNICAL DATA 159

14.1. ANALOG LOOP POINTS 159

14.1.1. Sensors *159*

14.1.2. Callpoints *160*

14.1.3. Bases *161*

14.1.4. Modules *162*

14.2. CONVENTIONAL LOOP POINTS 164

14.2.1. Sensors *164*

14.2.2. Callpoints *164*

14.2.3. Bases *165*

14.3. PRODEX PRODUCTS 166

14.3.1. The control panel *166*

14.3.2. Analog loop card (Prodex-HOAN) *167*

14.3.3. Conventional line card (Prodex-HOCO) *168*

14.3.4. The user panel, Prodex-MUP *168*

14.3.5. DC Converter, DCCONV *169*

14.3.6. Output control, Prodex-OPCO *169*

15. CALCULATION EXAMPLES 170

15.1. CALCULATION OF BATTERY CAPACITY 170

15.1.1. Alarm state current *170*

15.1.2. Normal state current *171*

15.1.3. Conventional system *173*

1 battery pair, 17Ah backup power 173

2 battery pairs, 34Ah backup power 174

15.1.4. Analog system *175*

1 battery pair, 17Ah backup power 175

2 battery pairs, 34 Ah backup power 176

4 battery pairs, 68 Ah backup power 177

15.2. CALCULATION OF LOOP CABLE CONDUCTORS 178

15.2.1. 1 Conductor pair *183*

15.2.2. 2 Conductor pairs *184*

1. General

This instruction manual is for the ProDex fire alarm system.

All rules and regulations in EN54 are to bee followed. The instructions in this manual are to bee followed only when no conflicts to EN54 occurs. If there are some questions regarding installation that isn't explained here, don't hesitate to contact HedPro Oy.

In this manual **all sensors, modules, bases etc. which are connected to the loop are called points**.

The mains power or the battery power must not be connected before the conditions in the chapter Procedures before power on are satisfied.

2. Conformity with the CE-Requirements

The ProDex fire alarm system is tested according to rules and regulations of the EN54. The equipment is in conformity with EMC-directive 89/336/EEC, if they are installed following the instructions issued by Oy HedPro Ab. In addition to that they are in conformity with low voltage directives 73/23/ EEC and 93/68/ EEC.

The equipment is CE-labelled.

The following general standards and product range standards have been followed.

Emission: **EN50081-1**

Immunity **EN50130-4**

2.1. Cables

All cables to the points must be of type KLMA, MMSA or MMPMA with metal shielding.

All other signal cables E.g. to the bells, to the user panels, RS232/485 must be off type MHS with metal shielding.

All cable shields have to be connected to the shield connection of the control panel housing and to the user panel housing.

If the point has a terminal for the shield the cable shielded must be connected to it.

The mains cable to the power transformer must be of type MMJ (or. similar).

2.2. Ferrites

The user panel cable must have a ferrite at the user panel end.

3. Wiring diagram of the system

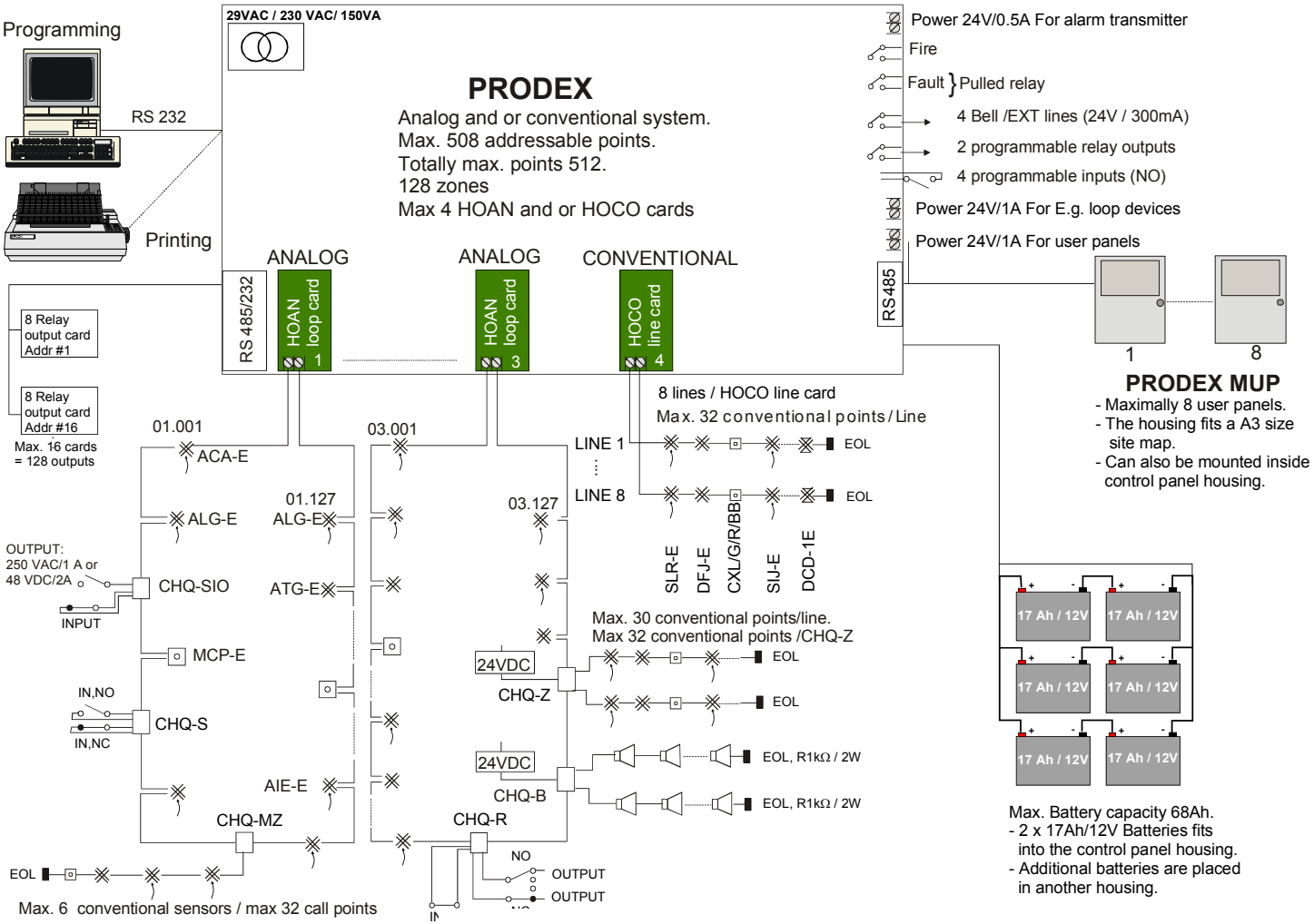

Picture 3-1

3.1. Cabling: types, dimensions, pairs

This table shows cable types, lengths and other parameters for the different connections to the system.

Connection	Cable type	Conductor pairs	Max. Length	Max. Voltage loss	Max. Resistance for the conductor pairs	Max. Capacitance	Shield	Notes
Mains	MMJ 3x1.5S	3 conductors	-			-		
Transformer - MB	MMO 2x0.75	2 conductors	-			-		Inside the housing
Ground	MK 6	1 conductor	-			-		Connected to the control panel housing
MB-MUP	MHS	min. 3	500m	4.6V	20.9Ω	0.15 μF	Yes, connected to the housing	Resistance for the voltage pairs. 1 pairs data 1 pair voltage A 1 pair voltage B
HOAN loop	KLMA	min. 1	Calculated from resistance / capacitance		74Ω	0.7μF	Yes, connected to the housing	Resistance measured from the more unfavourable side of the loop to any point
HOCO line	KLMA	1	Calculated from resistance / capacitance		74Ω	0.7μF	Yes, connected to the housing	Resistance to the last point on the line
DC CONV - CHQ-Z Power for CHQ-Z	MHS / KLMA	min. 1	depending on used pairs	3.5V with DCCONV	50Ω	0.7μF	Yes, connected to the housing	Using DCCONV, min. output 23.5V Eg. Using 1 conductor pair the maximum distance is 266m
Power for CHQ-B	MHS / KLMA	min. 1	depending on used pairs	4.3V with DCCONV	depending on Bell type	0.7μF	Yes, connected to the housing	Using DCCONV, min. output 23.5V The lenght is dependent on used bell type. Eg. 1 conductor pair for one MSB-6B/24 Bell Imax= 28 mA The maximum distance is 476m.
BELL / EXT lines	MHS / KLMA	min. 1	Calculated from resistance / capacitance	depending on Bell type	depending on Bell type	0.7μF	Yes, connected to the housing	The lenght is dependent on used bell type. Eg. 2 conductors for one MSB-6B/24 Bell Imax= 28 mA The maximum distance is 354m.
Relay outputs	MHS / KLMA	min. 1	Calculated from resistance / capacitance			0.7μF	Yes, connected to the housing	Resistance and voltage loss is dependent on the power consumption of the device connected to the relay
Inputs	MHS / KLMA	min. 1	1000m			0.7μF	Yes, connected to the housing	

Picture 3-2

4. Analog loop points (devices)

4.1. Sensors and Bases

4.1.1. General

The following sensors are supported:

- ACA-E, Multi sensor
- AIE-E, Ionistaion smoke sensor
- ALG-E, Photoelectric smoke sensor
- ATG-E, Heat sensor

The following bases are supported:

- YBN-R/3, normal mounting base.
- YB0-R/SCI, Short circuit isolator base.
- CHQ-BS, Sounder Base.

4.1.2. Multi-sensor ACA-E

ACA-E is a multi sensor, which has an optical, and a thermal element.



Picture 4-1

Features:

- Incorporates an Optical & Heat element
- Flat response Chamber
- Twin fire LED's allow 360° viewing
- Removable chamber
- Polling LED's controlled from Panel
- Variable sensitivity
- Approved to EN54 Part 5 & 7

The ACA-E has three modes, which are controlled from the Control Panel, allowing either the optical element or thermal element or both elements to be active in making the fire decision; also the sensor polling LED's can be controlled via the Control Panel.

The ACA-E smoke chamber can easily be removed or replaced for cleaning and the sensor can be locked onto its base by removing a small lug on the underside of the sensor.

4.1.3. Ionisation smoke sensor AIE-E

AIE-E is an Ionisation Sensor.



Picture 4-2

Features:

- Low standby current
- Twin fire LED's allow 360° viewing
- Shielded from external noise
- Electronics free mounting base
- Radioactive source Americium Am 241, < 0,5 µCi
- Variable sensitivity
- Electronically Addressed
- Approved to EN54 Part 7

A single radioactive source within the AIE-E ionises two chambers, which allows a small DC current to flow between the electrodes in each chamber. Smoke can freely enter the outer chamber whilst the inner chamber is virtually sealed. Smoke entering the outer chamber causes a reduction in the DC current, the imbalance between the two currents is proportional to smoke density, which is filtered and transmitted as the analogue value.

The threshold on the AIE-E can be adjusted to compensate for contamination. The adjustment can be made from the user panel or the PC software.

4.1.4. Photoelectric smoke sensor ALG-E

ALG-E is a Photoelectric Sensor.



Picture 4-3

Features:

- Flat response Chamber
- Twin fire LED's allow 360° viewing
- Removable chamber
- Electronics free mounting base
- Variable sensitivity
- Approved to EN54 Part 7

The ALG-E incorporates Hochiki's unique 'Flat Response Technology' removing the need to use Ionisation Sensors in the majority of applications and this also allows the sensor threshold level to be increased, thereby improving the signal to noise ratio and reducing susceptibility to false alarms.

4.1.5. Heat sensor ATG-E

ATG-E is a Heat Sensor.



Picture 4-4

Features:

- Low standby current
- Twin fire LED's allow 360° viewing
- Highly linear thermistor circuit
- Electronics free mounting base

- Variable sensitivity
- Approved to EN54 Part 5

The ATG-E Heat Sensor provides accurate temperature measurement data to the fire alarm control panel, which calculates the necessary fixed temperature functions as required by the appropriate standards.

The ATG-E is particularly suited to environments where high ambient temperatures exist such as boiler and drying rooms and where smoke sensors are unsuitable because of the presence of steam or cooking fumes such as in a kitchen.

4.1.6. Common base YBN-R/3

YBN-R/3 is the common mounting base for the analog sensors.



Picture 4-5

Features:

- Electronics free.
- IP20.
- Quick Connection via square cable clamps
- Stainless steel contacts
- Takes 2.5mm² cables
- Slim profile only 8 mm.
- Facility for remote indicator

4.1.7. Short circuit isolator, base YBO-R/SCI

YBO-R/SCI is a Loop Isolator base. It detects short circuits and cuts the loop power off from the sensors, which are affected of the short circuit.



YBO-R/SCI short circuit isolator base with cover

Picture 4-6

Features:

- IP20.
- Incorporates Analogue Base
- Detects short circuits on loop
- Status LED
- Connection of up to 127 per loop
- Bayonet slot, low insertion force for detectors

The YBO-R/SCI Base is compatible with any of the ASX Sensors, and can be used instead of the standard YBN-R/3 Base; this reduces the cost of the Short Circuit Isolators and improves the functionality. The Base incorporates an amber LED to show when it is isolating a section of the loop, and when used under each analogue Sensor if a single short circuit was to occur on the loop then no Sensors would be lost.

The YBO-R/SCI does not use an address, and has the same wiring configuration as the YBN-R/3 Sensor Base making it very simple to install. The YBO-R/SCI can also be used without a Sensor; in this case a cover should be fitted to conceal the wiring connections.

The YBO-R/SCI base doesn't reserve an own address in the loop.

4.1.8. Loop powered base sounder CHQ-BS

Model CHQ-BS is a Loop Powered Sounder Base.

Features:

- IP20.
- Incorporates Analogue Base
- Loop Powered
- Selection of Tones
- Single Loop Address
- Variable sound output 72-95 dB (A)

The CHQ-BS comprises of a low profile design sounder and base for the ASX range sensors.



CHQ-BS Base sounder with cover

Picture 4-7

The unit doesn't reserve an own address if the unit is used as a base for a sensor. If the unit is simply wall mounted (with a clip cover) the unit reserves 1 address.

The unit can also be mounted as a Wall Mounted version by the simple addition of a clip on cover.

4.1.9. Technical data

Specifications:	ACA-E	AIE-E	ALG-E	ATG-E	YBN-R/3	YBO-R/SCI	CHQ-BS
Operating voltage (high) [V]	24 – 40	24 – 40	24 – 40	24 – 40	24 – 40	24 – 40	24 – 40
Quiescent current [µA]	500	400	400	400	-	50	250
Operating temperature range [°C]	-10 - +50	-10 - +50	-10 - +50	-10 - +50	-10 - +50	-10 - +50	-10 - +50
Maximum humidity (non condensing at 40°C)	95% RH	95% RH	95% RH	95% RH	95% RH	95% RH	95% RH
Dimensions [mm]	100 x 56 [1)]	100 x 54 [1)]	100 x 46 [1)]	100 x 40 [1)]	100 x 8 [1)]	100 x 13 [1)]	115 x 27 [1)]
Compatible Bases	YBN-R/3, CHQ-BS, YBO-R/SCI	YBN-R/3, CHQ-BS, YBO-R/SCI	YBN-R/3, CHQ-BS, YBO-R/SCI	YBN-R/3, CHQ-BS, YBO-R/SCI			
Base Fixing Centres [mm]	48 through to 74	48 through to 74	48 through to 74	48 through to 74	48 through to 74	48 through to 74	48 through to 74
Weight (including base) [g]	100 (145)	115 (160)	95 (140)	90 (135)	45	85	200

(1) diameter x height [**d** x **h**]
(2) length x width x height [**l** x **w** x **h**]

4.2. Other devices

4.2.1. General

The following other products are supported:

- CHQ-MZ, Mini zone module for connecting conventional points to an analog loop.
- CHQ-Z, Zone module for connecting 2 conventional zones to an analog loop.
- CHQ-B, Bell module for connecting 2 bell lines.
- CHQ-R, module with 2-relay outputs and 1 input.
- CHQ-S, module with 2 inputs.
- CHQ-SIO, module with 1 input and 1 output.

4.2.2. Mini zone module, CHQ-MZ

Model CHQ-MZ is a Mini Zone Monitor designed to allow the CD and CDX range of detectors to be interfaced to the analogue addressable system. The unit will allow connection of up to 6 conventional detectors (of type SLK, SLR, SIJ, DCD, DFJ), which are fully monitored for open or short circuit. You can also connect conventional call points to a maximum point count of 32 (including sensors and points).



Picture 4-8

The CHQ-MZ has a simple DIL switch for addressing.

The unit is delivered with a separate mounting box, CHQ-BOX-S which ingress protection is IP67.

The conventional zone on the CHQ-MZ does not support any line continuity options, therefore if Call Points are being interfaced they should be wired at the beginning of the zone.

Features:

- Loop Powered.
- Up to 6 Conventional Detectors.
- The maximum count of attached points is 32. (6 detectors and 26 call points)
- Single Loop Address.
- Fully Monitored for Short and Open Circuit Faults
- Approved to EFSG for line units
- An open collector output is provided. The Control Panel controls this output.

Technical data:

Operating voltage (high) [V]	24 – 40
Quiescent current [µA]	310
Maximum current [mA] (alarm)	62.9
Capacitance on Conventional slave line	0.3 µF Max
Resistance on Conventional slave line	50Ω Max
E.O.L Device	Zener 24V / 0.4W
Open Collector Output Rating	24 VDC, 5 mA
Operating temperature range [°C]	-10 - +50
Maximum humidity (non condensing at 40°C)	95% RH
Dimensions (OEM-unit) [mm] L x W x H	(147 x 90 x 23) 160 x 110 x 92
Weight (OEM-unit) [g]	(75), 120

4.2.3. Zone module, CHQ-Z

Model CHQ-Z is a Dual Zone Monitor designed to allow the CD and CDX range detectors to be interfaced to the analogue addressable system. You can connect a maximum of 32 conventional points to the slave lines.



Picture 4-9

The CHQ-Z has a simple DIL switch for addressing.

The unit is delivered with a separate mounting box, CHQ-BOX-L which ingress protection is IP67.

The conventional zone on the CHQ-Z does not support any line continuity options, therefore if Call Points are being interfaced they should be wired at the beginning of the zone.

By installing a short circuit isolator base on both sides of the zone module you ensure that not more then 32 points are lost if a short circuit occurs.

The module needs external power supply 24 VDC.

Features:

- Single loop address
- Requires an auxiliary 24 VDC Supply
- Supports 2 independent zones of conventional detectors
- Both slave lines are fully monitored for short/open circuit
- Approved to EFSG for line units
- Fully monitored for open and short circuit.
- An voltage output is provided. The Control Panel controls this output.

Technical data:

Operating voltage (high) [V]	24 – 40
Quiescent current [µA]	350
External power supply [V]	20 – 28.8
From External power supply: Quiescent current [µA]	800
From External power supply: Both slave lines in Alarm state, current [mA]	70
Capacitance on Conventional slave line	0.3 µF Max
Resistance on Conventional slave line	50Ω Max
E.O.L Device	Zener 24V / 0.4W
Open Collector Output Rating	30 VDC, 30 mA
Detectors / slave line	Conventional call points – 32, SLK, SLR, SIJ, DCD, DFJ max 30. (Total max. 32)
Maximum point count (including both slave lines)	32
Operating temperature range [°C]	-10 - +50
Maximum humidity (non condensing at 40°C)	95% RH
Dimensions (OEM-unit) [mm] L x W x H	(185 x 97 x 30) 235 x 160 x 92
Weight (OEM-unit) [g]	(120), 550

4.2.4. Bell Module, CHQ-B

Model CHQ-B is a Dual Sounder Controller. The Dual Circuit Sounder Controller has two, sounder outputs with full fault monitoring. The monitored input can be used for local power supply fault monitoring or as a general-purpose input.

The CHQ-B has a simple DIL switch for addressing.

The unit is delivered with a separate mounting box, CHQ-BOX-L which ingress protection is IP67.



Picture 4-10

- The unit has a red led / bell line to indicate that it's active.
- The sounder output fault is indicated with a yellow flashing led.
- Polling is indicated with a green led.

The module needs external power supply 24 VDC for the Bells.

Features:

- Single loop address.
- Each alarm circuit fused at 1A.
- Two independent sounder circuits.
- Each circuit fully monitored for open and short circuit faults.
- Auxiliary monitored input.
- Outputs can be driven continuously or synchronized pulsed sounder drive.

Technical data:

Operating voltage (high) [V]	24 – 40
Quiescent current [µA]	340
External power supply for sounders [V]	19.2 - 30
Current consumption from External power supply: quiescent current [mA / active bell line]	8
Maximal output current / line [A]	1A
Maximal Capacitance / Bell line [µF]	0.3µF
Bell line E.O.L Device [kΩ]	1 kΩ (2W resistor).

Input line E.O.L device [Ω]	10kΩ (0.25W resistor)
Input ON threshold level [Ω]	470Ω ± 20%
Input, short circuit threshold level [Ω]	< 50Ω
Input, open circuit threshold level [kΩ]	> 100kΩ
Operating temperature range [°C]	-10 - +50
Maximum humidity (non condensing at 40°C)	95% RH
Dimensions (OEM-unit) [mm] L x W x H	(185 x 97x 30) 235 x 160 x 92
Weight (OEM-unit) [g]	(120), 550

4.2.5. Output module, CHQ-R



Picture 4-11

Model CHQ-R is a Dual Relay Controller.

It has two general-purpose relay outputs; each output can be driven separately for control of such devices as dampers or for control of plant and equipment shutdown etc. A general-purpose auxiliary input is provided which is fully monitored for short and open circuit; the monitoring can be disabled with bit 8 on the DIL switch.

The CHQ-R has a simple DIL switch for addressing.

- Polling is indicated with a red led.

The unit is delivered with a separate mounting box, CHQ-BOX-S which ingress protection is IP67.

Features:

- Loop powered.
- Single loop address.
- 2 Independently controlled changeover relays (NC / NO).
- Relays contact rated at 30 VDC at 1A.
- Auxiliary monitored input.

Technical data:

Operating voltage (high) [V]	24 – 40
Quiescent current [µA]	350
Maximum contact rating for the relays	30V, 1A
Input E.O.L Device [kΩ]	10 kΩ (0.25W resistor).
Input ON threshold level [Ω]	470Ω ± 20%
Input, short circuit threshold level [Ω]	< 50Ω
Input, open circuit threshold level [kΩ]	> 100kΩ
Operating temperature range [°C]	-10 - +50
Maximum humidity (non condensing at 40°C)	95% RH
Dimensions (OEM-unit) [mm] L x W x H	(147 x 90 x 23) 160 x 110 x 92

Weight (OEM-unit) [g]	(50), 120

4.2.6. Switch module, CHQ-S

Model CHQ-S is a Dual Switch Monitor.

The unit monitors two independent voltage free contacts, which can be selected as either normally open or normally closed. The selection is made with a DIL switch.

The Dual Switch Monitor can be used to interface a variety of inputs such as door contacts, sprinkler flow/ door switches and plant equipment.

The CHQ-S has a simple DIL switch for addressing.



Picture 4-12

- Polling is indicated with a red led.

The unit is delivered with a separate mounting box, CHQ-BOX-S which ingress protection is IP67.

Features:

- Single loop address.
- Loop powered.
- 2 independent inputs for monitoring of voltage free contacts.
- Each input can be configured to monitor either normally open or normally close contacts.

Technical data:

Operating voltage (high) [V]	24 – 40
Quiescent current [µA]	330 [1)]
Maximum current consumption, both inputs active [mA]	4.3
Input ON threshold level [Ω]	< 50Ω
Input, OFF threshold level [kΩ]	> 100kΩ
Operating temperature range [°C]	-10 - +50
Maximum humidity (non condensing at 40°C)	95% RH
Dimensions (OEM-unit) [mm] L x W x H	(147 x 90 x 23) 160 x 110 x 92
Weight (OEM-unit) [g]	(75), 120

1) Add 85µA / input for NC monitoring.

4.2.7. Single Input / Output module, CHQ-SIO



Picture 4-13

Model CHQ-SIO is a Single Input / Output Module.

The module has one single mains rated relay output, for the control of such devices as dampers, extractors or plant and equipment shutdown.

A general-purpose auxiliary input is provided which is fully monitored for short and open circuit; the monitoring can be disabled with bit 8 on the DIL switch.

The CHQ-SIO has a simple DIL switch for addressing.

- Polling is indicated with a red led.

The unit is delivered with a separate mounting box, CHQ-BOX-S which ingress protection is IP67.

Features:

- Single loop address.
- Loop powered.
- Single mains rated relay contact, at 250 VAC 1A (Resistive) / 48 VDC 2A (Resistive).
- Auxiliary monitored input.
- Screw terminals & flying leads for easy cable termination.

Technical data:

Operating voltage (high) [V]	24 – 40
Quiescent current [µA]	350
Relay contact rating	250 VAC / 1A (resistive), 48 VDC / 2 A (resistive)
Input E.O.L Device [kΩ]	10 kΩ (0.25W resistor).
Input ON threshold level [Ω]	470Ω ± 20%
Input, short circuit threshold level [Ω]	< 50Ω
Input, open circuit threshold level [kΩ]	> 100kΩ
Operating temperature range [°C]	-10 - +50
Maximum humidity (non condensing at 40°C)	95% RH
Dimensions (OEM-unit) [mm] L x W x H	147 x 90 x 23 160 x 110 x 92

Weight (OEM-unit) [g]	(85), 120

4.2.8. Manual call point, MCP-E



Picture 4-14

Model MCP-E is a Manual Break Glass Call Point.

The device can be tested without breaking the glass by insertion of a test key in the under side of the unit.

Two non-polarised flying leads are provided for easy connection to the loop wiring via the back box terminals.

The MCP-E has a simple DIL switch for addressing.

The back box, which fits with the MCP-E, is SR3T.

- Polling is indicated with a flashing red led.
- When the unit has been operated the red led is continuously lit.

Features:

- Fast response.
- Status led.
- Surface or flush mounting.

Technical data:

Operating voltage (high) [V]	24 – 40
Quiescent current [µA]	280
Alarm state current [mA]	4.1
Operating temperature range [°C]	-10 - +50
Maximum humidity (non condensing at 40°C)	95% RH
Dimensions [mm] L x W x H	Flush unit: 88 x 88 x 20 Surface box: 88 x 88 x 32
Weight [g]	Flush unit: 100 Surface box: 80

5. Conventional points (devices)

5.1. Sensors and Bases

5.1.1. General

The following sensors are supported:

- SLR-E, Photoelectric smoke sensor.
- SLK-EN, Photoelectric smoke sensor.
- SIJ-E, Ionisation smoke sensor.
- DCD-1E, Combined Rate of rise heat detector (60°).
- DCD-R1E, Combined Rate of rise heat detector (90°).
- DFJ-60E, Fixed temperature heat detector (60°).
- DFJ-90E, Fixed temperature heat detector (90°).
- DFG-60E, Waterproof fixed temperature heat detector (60°).

The following bases are supported

- YBN-R/4, Common base.
- YBO-R/5, Common base with a remote fire led output.
- YBF-RL/4H5, Base for the SLK-EN sensor.

5.1.2. Photoelectric smoke sensor, SLR-E

The SLR-E is a Photoelectric Detector.



Picture 5-1

Features:

- Flat response chamber
- Low profile design with one piece outer cover
- Twin fire LED's allow 360° viewing
- Removable chamber
- Electronics free mounting base
- Approved to EN54 Part 7

The SLR-E incorporates Hochiki's unique 'Flat Response Technology' removing the need to use Ionisation Detectors in the majority of applications and this also allows the Detector threshold level to be increased, thereby improving the signal to noise ratio and reducing susceptibility to false alarms.

The SLR-E smoke chamber is easily removed or replaced for cleaning and utilises a unique baffle design which allows smoke to enter the chamber while keeping out ambient light.

5.1.3. Photoelectric smoke sensor, SLK-EN

The SLK-EN is a Photoelectric Detector.



Picture 5-2

Features:

- Fire alarm can be achieved for testing purposes by holding a magnet against a test point on the sensor.
- Flat response chamber
- Low profile design with one piece outer cover
- Twin fire LED's allow 360° viewing
- Removable chamber
- Electronics free mounting base
- Approved to EN54 Part 7

The SLK-EN incorporates Hochiki's unique 'Flat Response Technology' removing the need to use Ionisation Detectors in the majority of applications and this also allows the Detector threshold level to be increased, thereby improving the signal to noise ratio and reducing susceptibility to false alarms.

The SLK-EN smoke chamber is easily removed or replaced for cleaning and utilises a unique baffle design which allows smoke to enter the chamber while keeping out ambient light.

5.1.4. Ionisation smoke sensor, SIJ-E

Model SIJ-E is an Ionisation Detector.



Picture 5-3

Features:

- Low quiescent current
- Low profile design with one piece outer cover
- Shielded from external noise
- Twin fire LED's allow 360° viewing
- Full Range of Mounting Bases
- Approved to EN54 Part 7.

Each detector incorporates a single radioactive source, which ionises two chambers, which allows a small DC current to flow between the electrodes in each chamber. Smoke can freely enter the outer chamber whilst the inner chamber is virtually sealed. Smoke entering the outer chamber causes a reduction in the DC current, the imbalance between the two currents is proportional to the smoke density, which is converted, filtered and then used to trigger the internal latching circuit.

5.1.5. Combined Rate of rise heat detector, DCD-1E (60°)

Model DCD-1E is a rate of rise heat detector.

Features:

- Electronic linear heat detection.
- Twin fire LED's allow 360° viewing.
- Grade 1 Rate of Rise detector.
- Full range of mounting bases.
- Approved to EN54 Part 5.

The sensor has a 60°fixed temperature element, the DCD-1E uses a thermistor and linearising circuit to provide an accurate linear response Heat Detector.



Picture 5-4

The DCD-1E is ideal for use where medium ambient temperatures exist, such as drying rooms or where Smoke Detectors are unsuitable because of the presence of steam or cooking fumes such as in a kitchen.

5.1.6. Combined Rate of rise heat detector, DCD-R1E (90°)

Model DCD-R1E is a rate of rise heat detector.

Features:

- Electronic linear heat detection.
- Twin fire LED's allow 360° viewing.
- Range 1 Rate of Rise detector.
- Electronics free mounting base.
- Approved to EN54 Part 8.

The detector has a 90°fixed temperature element, the DCD-R1E uses a thermistor and linearising circuit to provide an accurate linear response Heat Detector.



Picture 5-5

The DCD-R1E is ideal for use where high ambient temperatures exist, such as boiler and drying rooms and where Smoke Detectors are unsuitable because of the presence of steam or cooking fumes such as in a kitchen.

5.1.7. Fixed temperature heat detector, DFJ-60E (60°)

Model DFJ-60E is a 60°C fixed temperature heat detector.

Features:

- Electronic linear heat detection.
- Twin fire LED's allow 360° viewing.
- Fixed Temperature Detector.
- Full range of mounting bases.
- Approved to EN54 Part 5.



Picture 5-6

The DFJ-60E uses a thermistor and linearising circuit to provide an accurate linear response Heat Detector.

The DFJ-60E is ideal for use where medium ambient temperatures exist, such as drying rooms or where Smoke Detectors are unsuitable because of the presence of steam or cooking fumes such as in a kitchen.

5.1.8. Fixed temperature heat detector, DFJ-90E (90°)

Model DFJ-90E is a 90°C fixed temperature heat detector.



Picture 5-7

Features:

- Electronic linear heat detection.
- Twin fire LED's allow 360° viewing.
- Fixed Temperature Detector.
- Full range of mounting bases.
- Approved to EN54 Part 8.

The DFJ-90E uses a thermistor and linearising circuit to provide an accurate linear response Heat Detector.

The DFJ-90E is ideal for use where high ambient temperatures exist, such as boiler and drying rooms and where Smoke Detectors are unsuitable because of the presence of steam or cooking fumes such as in a kitchen.

5.1.9. Waterproof fixed temperature heat detector, DFG-60E (60°)

Model DFG-60E is a 60°C waterproof IP67 fixed temperature heat detector.

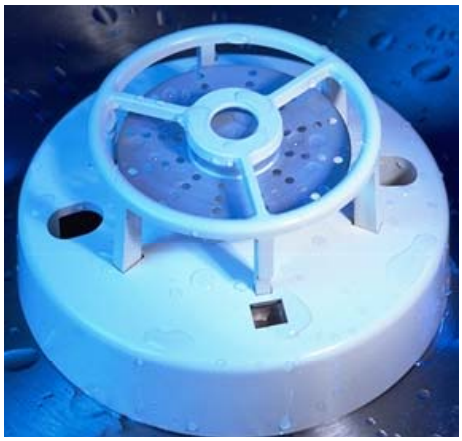

Picture 5-8

Features:

- Waterproof, IP67 ingress protection.
- Operating temperature range –30° - 60°C.
- Bi-metallic heat strip to sense temperature change.
- Zero standby current.
- Fixed Temperature Detector.

The DFG-60E is ideal for use in environments which are exposed to high levels of condensation.

The detector doesn't require any base. It has flying leads for connection to a conventional zone.

5.1.10. Common base YBN-R/4

YBN-R/4 is the common mounting base for the conventional sensors.

Features:

- Slim profile, only 8 mm.
- Rugged design.
- Electronics free.
- Quick connections via square cable clamps.
- Takes 2.5^2 mm cables

The base does not provide line continuity during detector removal, therefore if Call Points are being used then these should be wired onto the zone first.

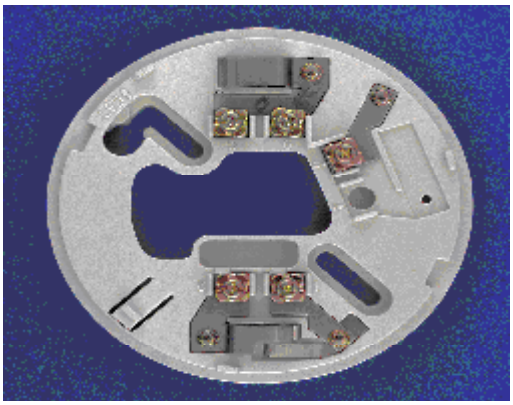

Picture 5-9

5.1.11. Common base with a remote fire led output YBO-R/5

YBN-R/5 is a common mounting base for the conventional sensors including a output for a remote fire led.

Features:

- Slim profile, only 8 mm.
- Rugged design.
- Takes 2.5^2 mm cables

The base does not provide line continuity during detector removal, therefore if Call Points are being used then these should be wired onto the zone first.



Picture 5-10

5.1.12. Common base for the SLK-EN sensor, YBF-RL/4H5

YBF-RL/4H5 is a common mounting base for the SLK-EN sensor.

Features:

- Slim profile, only 8 mm.
- Rugged design.
- Electronics free.
- Takes 2.5^2 mm cables

The base does not provide line continuity during detector removal; therefore if Call Points are being used then these should be wired onto the zone first.

5.1.13. Technical data

Specifications:	SLR-E	SLK-EN	SIJ-E	DCD-1E	DCD-R1E	DFJ-60E	DFJ-90E	DFG-60E
Operating voltage [V]	15 – 30	15 – 30	15 – 30	15 – 30	15 – 30	15 – 30	15 – 30	15 – 30
Standby current [µA]	35	0	35	35	35	35	35	0
Maximum current [mA]	40		40	40	40	40	40	50
Operating temperature range [°C]	-10 - +50	-10 - +50	-10 - +50	-10 - +50	-10 - +50	-10 - +50	-10 - +50	-30 - +60
Maximum humidity (non condensing at 40°C)	95% RH	95% RH	95% RH	95% RH	95% RH	95% RH	95% RH	Waterpro of, IP67
Dimensions [mm]	100 x 46 [1)]	100 x 54 [1)]	100 x 46 [1)]	100 x 46 [1)]	100 x 46 [1)]	100 x 46 [1)]	100 x 46 [1)]	98 x 45 [1)]
Compatible Bases	YBN-R/4, YBO-R/5	YBF-RL/4H5	YBN-R/4, YBO-R/5	YBN-R/4, YBO-R/5	YBN-R/4, YBO-R/5	YBN-R/4, YBO-R/5	YBN-R/4, YBO-R/5	No base needed.
Base Fixing Centres [mm]	48 – 74	48 – 74	48 – 74	48 – 74	48 – 74	48 – 74	48 – 74	70
Weight (including base) [g]	95 (140)	115 (160)	80 (125)	95 (140)	95 (140)	95 (140)	95 (140)	80

Specifications:	YBN-R/4	YBO-R/5	YBF-RL/4H5
Operating voltage [V]	15 – 30	15 – 30	15 – 30
Standby current [µA]	0	0	0
Operating temperature range [°C]	-10 - +50	-10 - +50	-10 - +50
Maximum humidity (non condensing at	95% RH	95% RH	95% RH

40°C)			
Dimensions [mm]	100 x 8 [1)]	100 x 8 [1)]	100 x 8 [1)]

(1) diameter x height [**d** x **h**]
(2) length x width x height [**l** x **w** x **h**]

5.2. Other devices

5.2.1. Manual call point, CXL/G/R/BB

The CXL/G/R/BB is a manual break glass call point.



Picture 5-10

Features:

- Surface or flush mounting.
- The unit accepts 2.5 mm conductors.

Device testing is made by insertion of a test key in the under s

Technical data:

Operating voltage [V]	12 – 30
Operating temperature range [°C]	-40 - +85
Maximum humidity (non condensing at 40°C)	95% RH
Ingress protection (IP)	42
Dimensions [mm] H x W x D	Flush unit: 87 x 87 x 20 Surface: 87 x 87 x 53
Weight [g]	190

5.2.2. Manual call point, KAC/G/HE

The KAC/G/HE is a manual break glass call point.



Picture 5-11

Features:

- Surface or flush mounting.
- The unit accepts 2.5mm conductors.

Device testing is made by insertion of a test key in the under side of the unit.

Technical data:

Operating voltage [V]	12 – 30
Operating temperature range [°C]	-10 - +50
Maximum humidity (non condensing at 40°C)	95% RH
Dimensions [mm] L x W x H	Flush unit: 88 x 88 x 20 Surface box: 88 x 88 x 32
Weight [g]	Flush unit: 100 Surface box: 80

5.2.3. Optical beam detector, SPB-ET

The SPB-ET is a two wire beam detector that consists of an emitter and receiver and it covers a distance of 5 - 100m, the beam is pulsed to reduce the overall current consumption and improve the noise rejection characteristics. The emitter and receiver are synchronised via a two-wire link, which also supplies power to the emitter.

The detector is powered directly from the zone, so no auxiliary power supplies are required.



Picture 5-12

Features:

- 5 - 100m range.
- Powered directly from the zone.
- Full line continuity options.
- Automatic compensation.
- Approved to BS5839 Part 5.

Technical data:

Operating voltage [V]	15 – 33
Quiescent current [µA]	240
Maximum current [mA]	50
Operating temperature range [°C]	-10 - +50
Maximum humidity (non condensing at 40°C)	95% RH
Operation range [m] (between receiver and transmitter).	5 - 100
Sensitivity range	25%, 50% and 70% obscuration (selectable)
Dimensions [mm] H x W x D	86 x 100
Weight [g] (receiver / transmitter)	685 / 600

5.2.4. Reflective beam detector, SRA-ET

The SRA-ET is a reflective beam detector that works over a distance of 5 - 30m, the beam is pulsed to reduce the overall current consumption and improve the noise rejection characteristics.



Picture 5-13

The detector is powered directly from the zone, so no auxiliary power supplies are required.

The SRA-ET comes complete with a Reflector and Termination Module which fits directly on to a standard U.K dual back box, this allows the detector be surface or flush mounted.

The SRA-ET is not solar blind so care should be taken when installing the detector as false alarms may occur.

Features:

- 5 - 30m range.
- Small flat reflector.
- Powered directly from the zone.
- Full line continuity options.
- Automatic compensation.

Technical data:

Operating voltage [V]	15 – 30
Quiescent current [µA]	350
Maximum current [mA]	50
Operating temperature range [°C]	-10 - +50
Maximum humidity (non condensing at 40°C)	95% RH
Operation range [m] (between receiver and transmitter).	5 - 30
Sensitivity range	30%
Dimensions [mm] H x W x D	152 x 122 x 80 190 x 190 x 3 (reflector)
Weight [g] (SRA-ET/ reflector)	700 / 50

5.2.5. Smoke sensor heater, RVE

The RVE heater is design to use with smoke sensors, which are mounted in cold areas, were moisturising of the detection element can occur. The bottom part of the heater is mounted underneath the sensors mounting base. The heater has a hinge, which makes the cleaning of the sensor easy. Also in high areas just push the heater aside to remove the sensor with a removal stick.

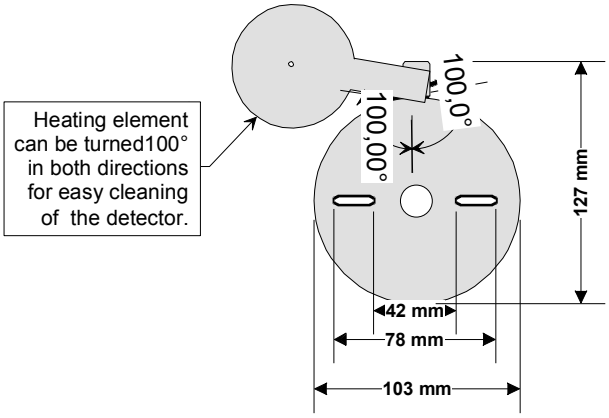

Picture 5-14

The supply voltage to the heater is connected to the mounting box, which is supplied. The supply voltage must be controlled with a thermostat, adjusted to switch on at +5°C.

Technical data:

Type	RVE
Supply Voltage **[VAC]**	24
Current consumption **[mA]**	70
Effect **[W]**	1.7
Dimensions **[l x h x w] [mm]**	103 x 65 x 127
Supplies	2x3mm screw, 2x6mm screw plugs

6. Installation of loop points

6.1. General

All sensors are supplied with dust covers. The dust covers must not be removed until the system is started up. The dust-covers prevent dirt from enter the chamber of the sensor under installation.



If the device is subjected to any of the following it should not be used:
Dis-assembly or re-assembly.
Impact or shock.
Touching the thermistor located in the centre of the sensor (ATG-E)



Install sensors and bases only in suitable environment, avoid:
Situations in which condensation exists.
Situations in which corrosive gases exists.
Situations in which dust or steam exists.
Situations in which obstacles exists, which could impede airflow to the sensor.
Hazardous areas.

All products have to bee mounted on an even surface so that the product isn't bended.
All sensor bases are mounted with 2 3 mm∅ screws.
The screws may not be tightened to hard because this might cause splitting of the plastic of the device.



All analog sensors, which have not previously been used, have the address 127.

6.2. Analog points

6.2.1. A few examples

These examples are made with the common base YBN-R/3

This is an example of a loop, which runs from one base to the next one. This kind of a loop must always be connected to the loop return terminals of the ProDex-HOAN loop card, unless the loop consists of less then 32 points.

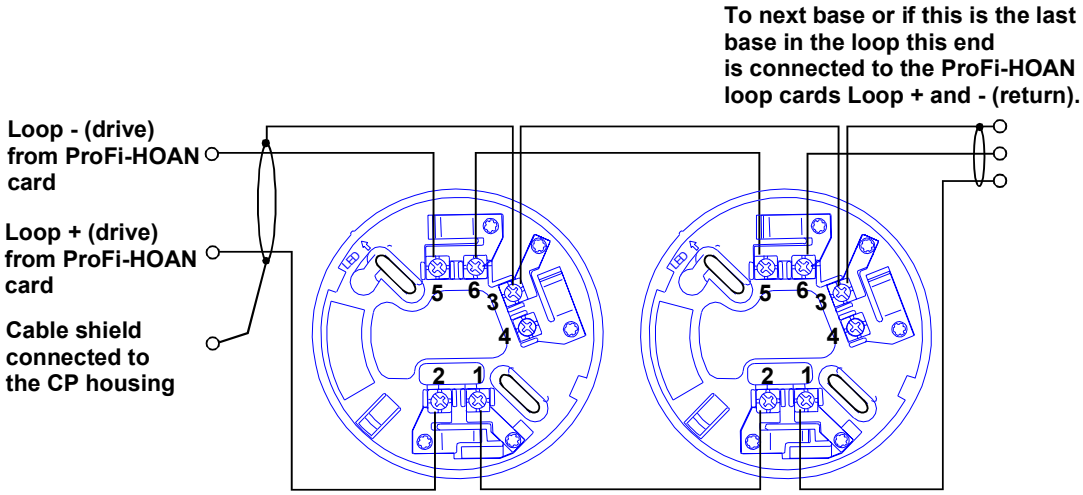

Picture 6-1

This is an example of a main cable with branches consisting of points. The advantage with using branches is that the thick main cable is not dragged through all points.

All branches can be made with a cable with fewer conductors hence cheaper. The maximum allowed cable resistance for a point on the loop, measured from the loop card must not in any case exceed 74Ω. If the loop runs through all points the resistance can be a matter of concern. Anyway the resistance from loop drive or loop return to the end of the branch, measured from the unfavourable side of the loop (the most distant path) must not exceed 74Ω.

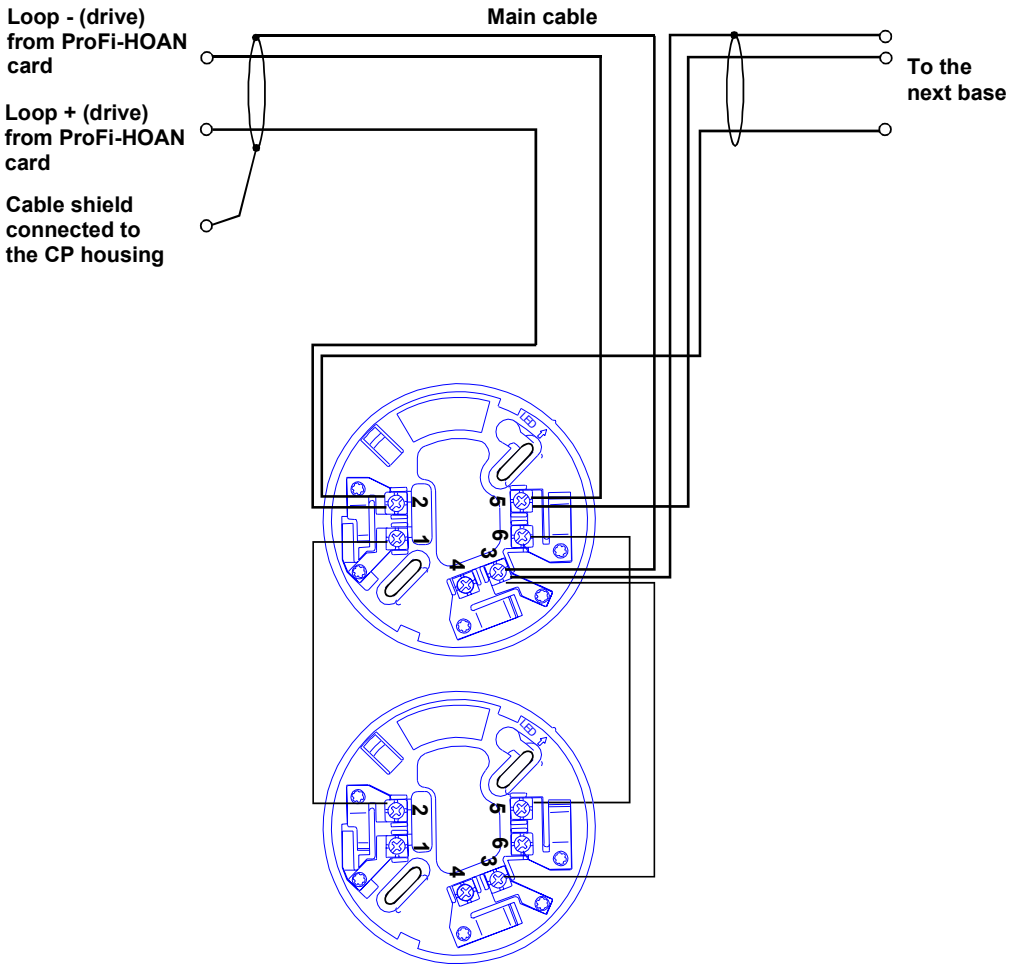

Picture 6-2

6.2.2. The Analog common base YBN-R/3

Installation:

1. Use 3 mm ∅ screws.
2. Drill 2 holes on a distance of 48 – 74 mm for the screws or screw plugs.
3. The two holes are to be drilled so that the cable lead-through is in the middle.
4. Drag the cable through the base cable entry.
5. Cut the cable suitable for the base.
6. Mount the base with 2 screws, 3 mm ∅.
7. Peal the cable.
8. Peal the conductors so that there is no unisolated conductor outside the terminals.
9. Connect the conductors to the needed terminals.
10. Attach the sensor or the cover to the base. Both base and sensor has an alignment mark which helps to find the right position for the sensor. The sensor is inserted to the base with the alignment marks about 15° apart from each other (the base mark clockwise from the sensor mark). When the sensor is inserted right, you twist the sensor clockwise until the alignment marks are facing each other.

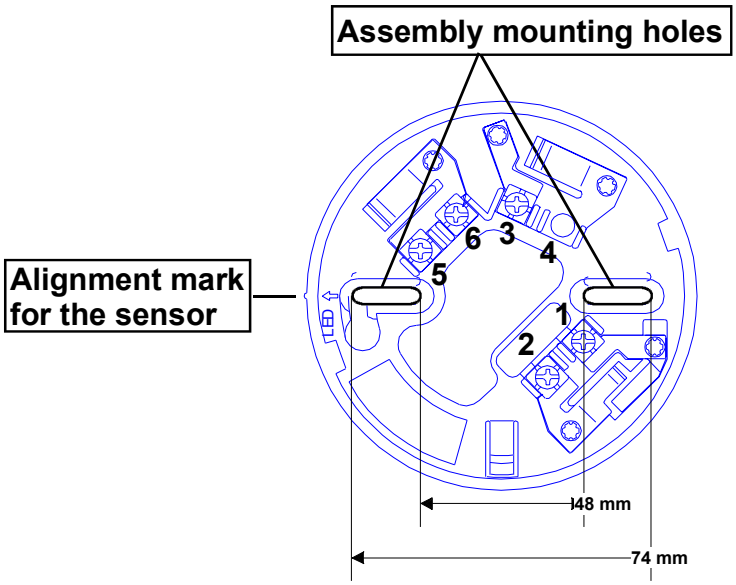

Picture 6-3

The connection terminals of the base:

1. Loop +, IN
2. Loop +, OUT
3. Earth
4. Remote LED -
5. Loop –
6. Loop, -

6.2.3. The short circuit isolator base YBO-R/SCI

Installation:

1. Use 3 mm ∅ screws.
2. Drill 2 holes on a distance of 48 – 74 mm for the screws or screw plugs.
3. The two holes are to be drilled so that the cable entry hole is in the middle.
4. Drag the cable through the base cable entry hole.
5. Cut the cable suitable for the base.
6. Mount the base with 2 screws, 3 mm ∅.
7. Peal the cable.
8. Peal the conductors so that there is no unisolated conductor outside the terminals.
9. Connect the conductors to the needed terminals.
10. Attach the sensor or the cover to the base. Both base and sensor has an alignment mark which helps to find the right position for the sensor. The sensor is inserted to the base with the alignment marks about 15° apart from each other (the base mark clockwise from the sensor mark). When the sensor is inserted right, you twist the sensor clockwise until the alignment marks are facing each other.

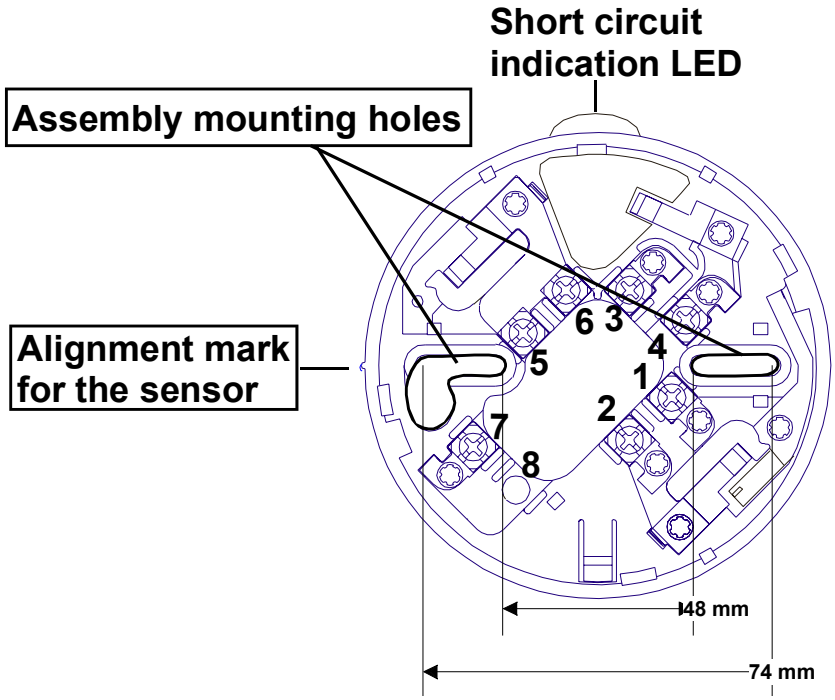

Picture 6-4

The connection terminals of the isolator base:

1. Loop +, IN / OUT
2. Loop +, OUT / IN
3. Remote Indication LED +
4. Remote Indication LED -
5. Loop –
6. Loop, -
7. Screen
8. Not in use

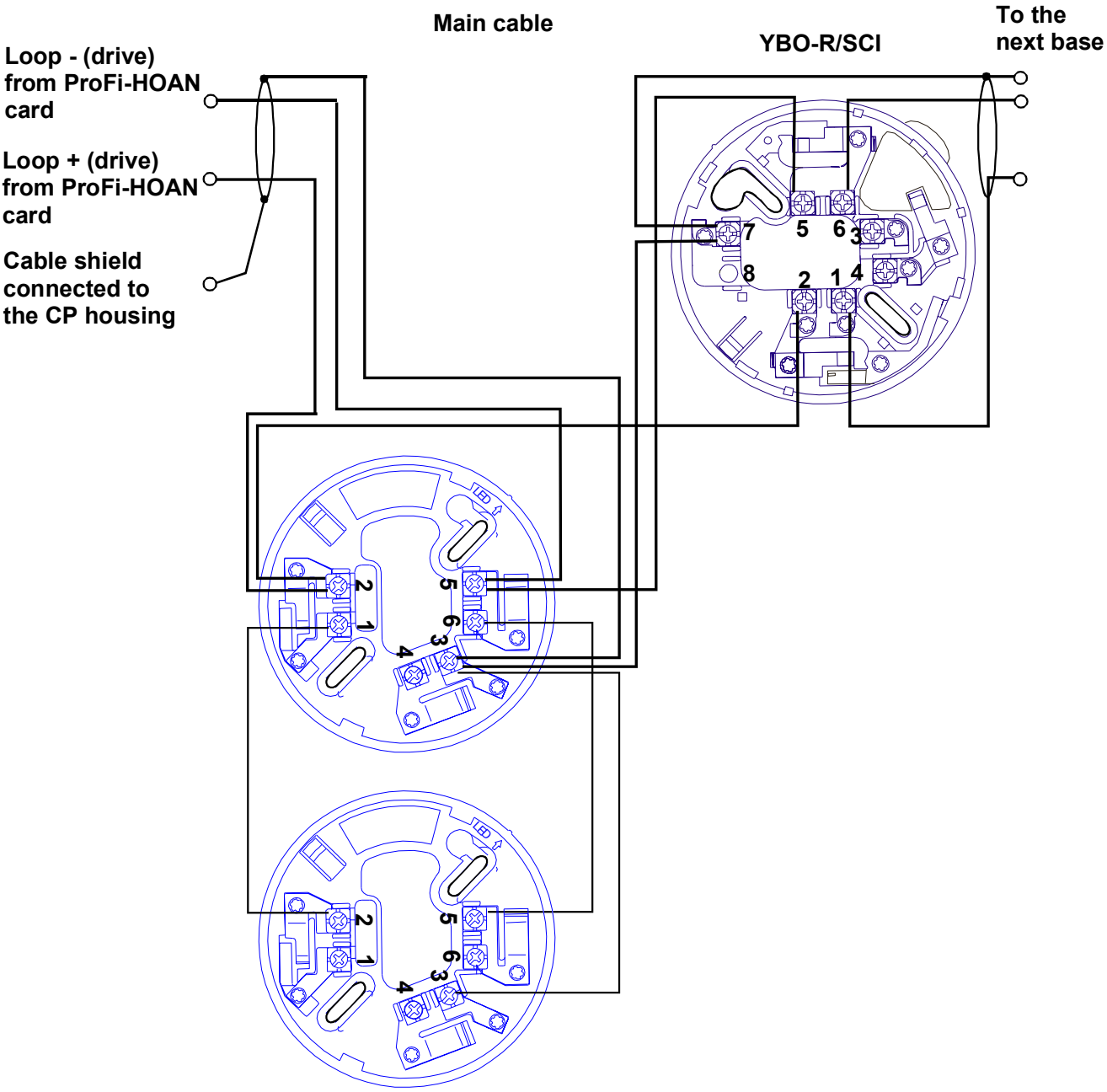
Main cable
YBO-R/SCI
To the next base
Loop - (drive) from ProFi-HOAN card
Loop + (drive) from ProFi-HOAN card
Cable shield connected to the CP housing
7
5
6
3
8
2
1
4
The last base in an ending branch. The points in this branch must be less then 32.

Picture 6-5

6.2.4. The base sounder CHQ-BS

The base sounder consists of 2 parts, the actual sounder and an adapter part, which is mounted to the ceiling or wall. The base sounder is mounted on the adapter.

Installation:

1. Use 3 mm ∅ screws.
2. Drill 2 holes on a distance of 48 – 74 mm for the screws or screw plugs.
3. The two holes are to be drilled so that the cable entry hole is in the middle.
4. Drag the cable through the adapter plate cable entry.
5. Mount the adapter plate with the screws.
6. Drag the cable through the base cable entry.
7. Cut the cable suitable for the base.
8. Mount the base with 2 machine thread screws, 3 mm ∅ length 30 mm.
9. Peal the cable.
10. Peal the conductors so that there is no unisolated conductor outside the terminals.
11. Connect the conductors to the needed terminals.
12. Attach the sensor or the cover to the base. Both base and sensor has an alignment mark which helps to find the right position for the sensor. The sensor is inserted to the base with the alignment marks about 15° apart from each other (the base mark clockwise from the sensor mark). When the sensor is inserted right, you twist the sensor clockwise until the alignment marks are facing each other.

The adapter plate.

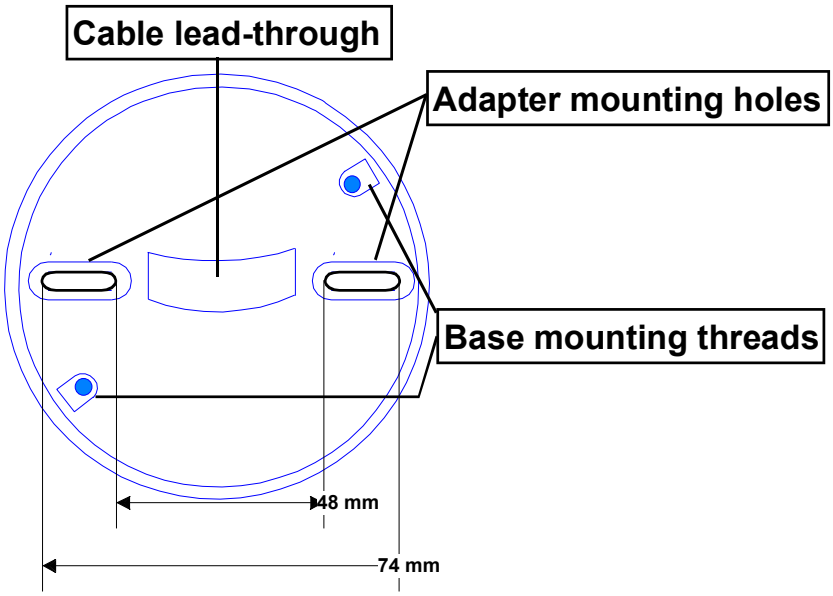

Picture 6-6

The base sounder.

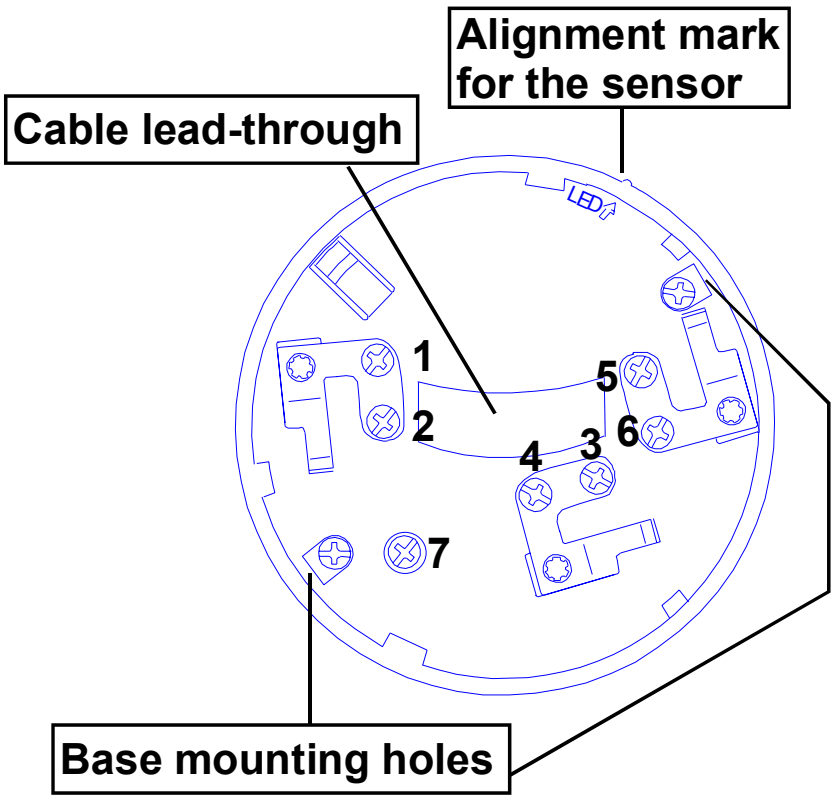

Picture 6-7

The connection terminals of the base sounder:

1. Loop +, IN / OUT
2. Loop +, IN / OUT
3. Remote Indication LED -
4. Remote Indication LED -
5. Loop –
6. Loop, -
7. Earth

6.2.5. Mini zone module, CHQ-MZ

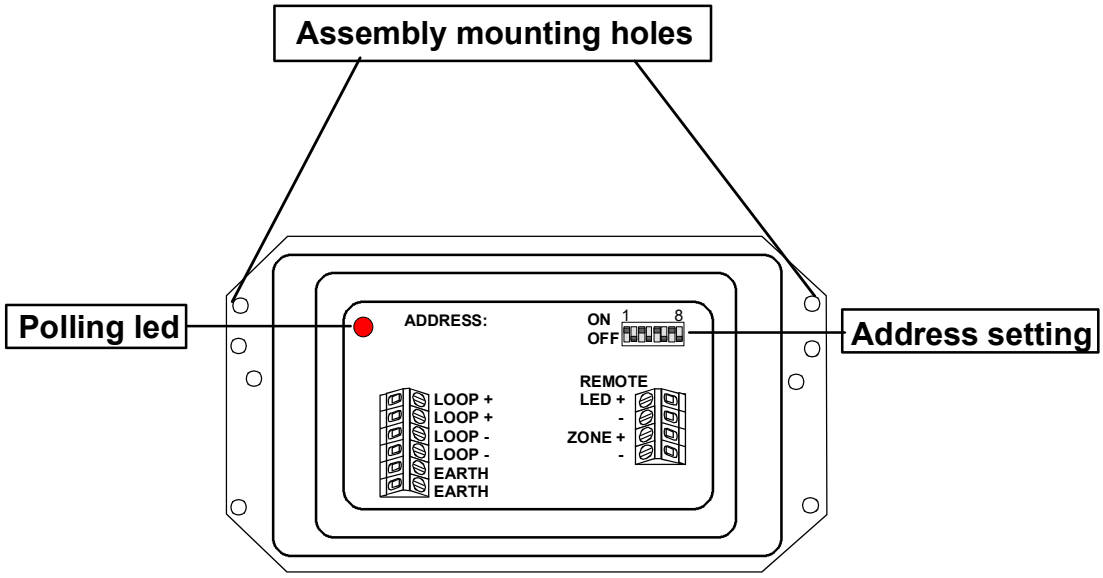

Picture 6-8

Maximum zone cable resistance is 50Ω; maximum capacitance is 0.3µF.

1. Drill cable entry holes in the box that you have chosen for this installation.
2. Ensure glands confirm to the ingress protection (IP-class) required.
3. Fit the CHQ-MZ module inside the mounting box CHQ-BOX-S.
4. Use the 4 holes in the corners of the CHQ-MZ to attach it to the box.
5. For this use 4 screws, 4 mm ∅.
6. Drag the cables through the cable entry holes of the box.
7. Cut the cables suitable for the module.
8. Peal the cables.
9. Peal the conductors so that there is no unisolated conductor outside the terminals.
10. Connect the conductors to the needed terminals.
11. Terminate the zone line with the TE-RH-E unit at the last detector on the line.
12. Set the address with the 8-bit DIL-switch. See chapter

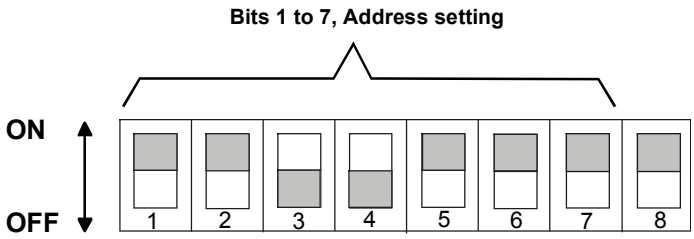

Picture 6-9

You can attach up to 6 conventional detectors to the conventional loop, which is attached to the zone terminals. In addition you can attach 26 manual call points. The total count of points must not exceed 32.

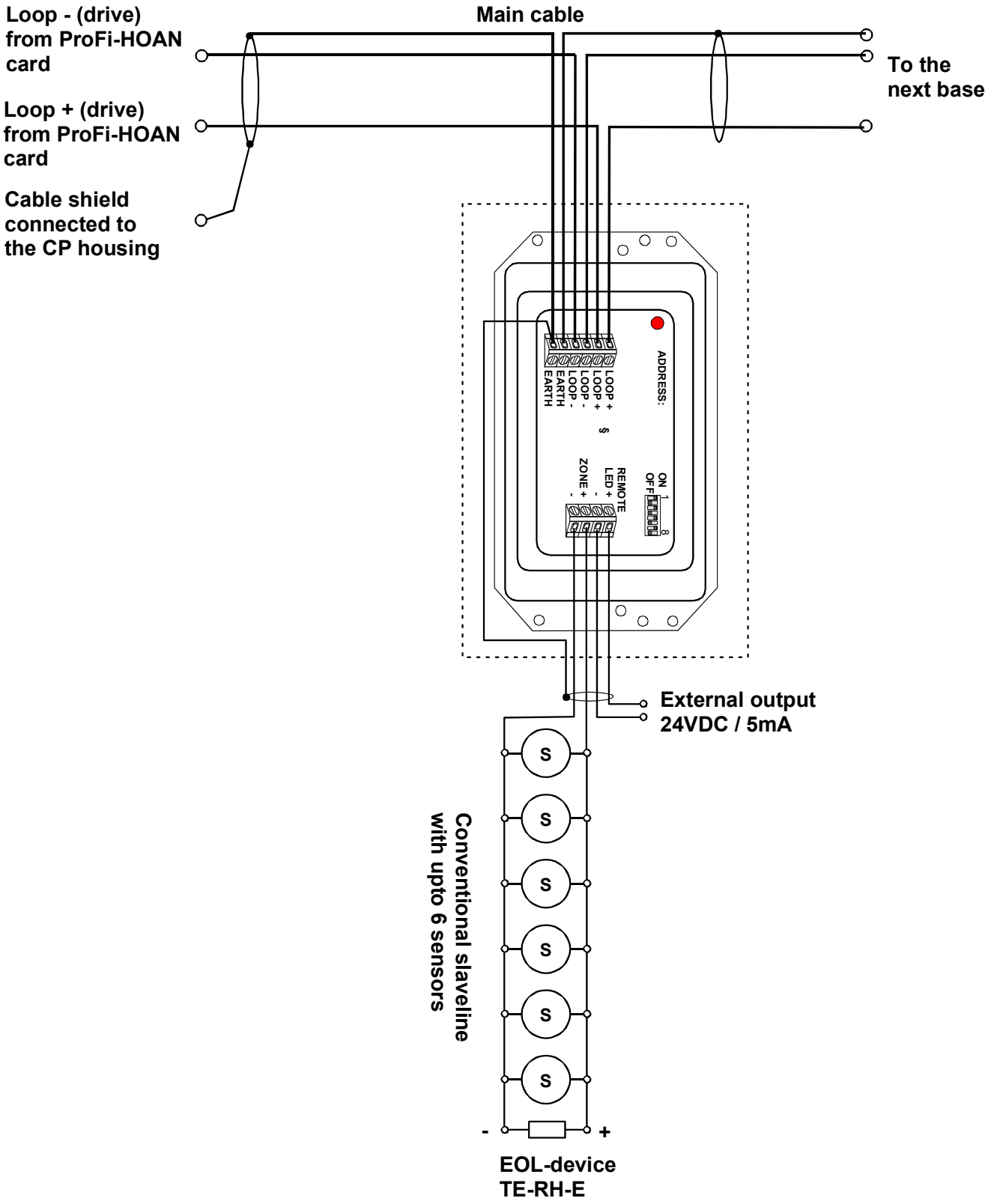

Picture 6-10

6.2.6. Zone module, CHQ-Z

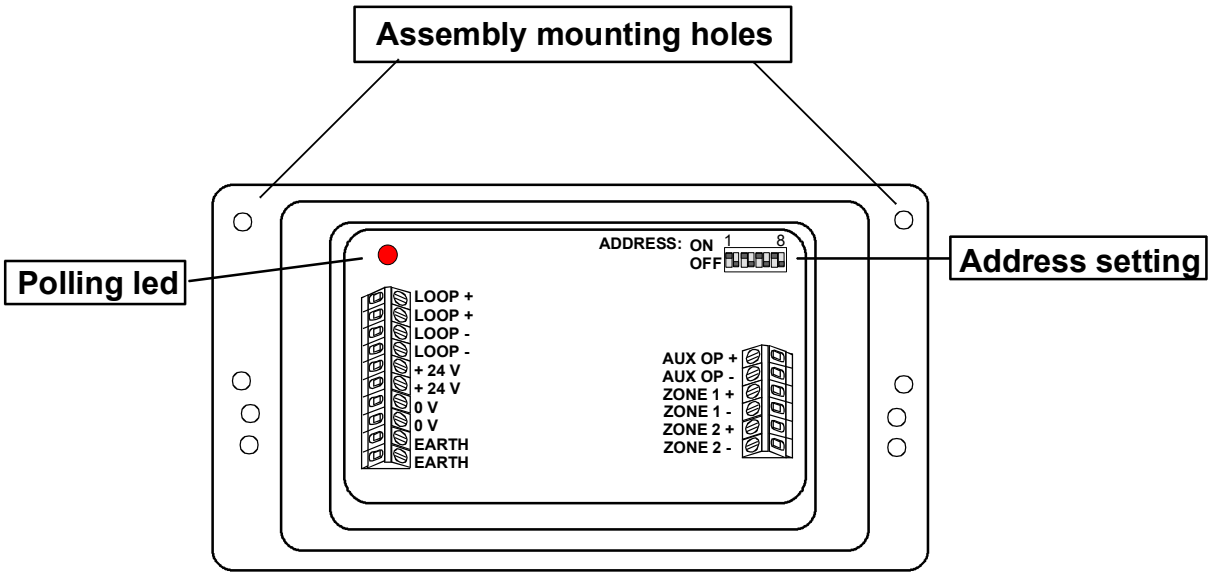

Picture 6-11

Maximum zone cable resistance is 50Ω; maximum capacitance is 0.3µF.

1. Drill cable entry holes in the box that you have chosen for this installation.
2. Ensure glands confirm to the ingress protection (IP-class) required.
3. Fit the CHQ-Z module inside the mounting box CHQ-BOX-L.
4. Use the 4 holes in the corners of the CHQ-Z to attach it to the box.
5. For this use 4 screws, 4 mm ∅.
6. Drag the cables through the cable entry holes of the box.
7. Cut the cables suitable for the module.
8. Peal the cables.
9. Peal the conductors so that there is no unisolated conductor outside the terminals.
10. Connect the conductors to the needed terminals.
11. Terminate the zone lines with the TE-RH-E unit at the last detector on the line.
12. Set the address with the 8-bit DIL-switch. See chapter

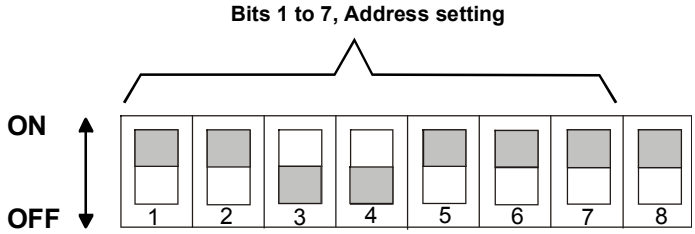

Picture 6-12

The total count of conventional points must not exceed 32 (including both slave lines).

Power supply for the zones

The voltage must be between 20 – 28.8 VDC



Instead of normal loop cable you can use MHS-type cable for the power supply of the module.

The conductor pair resistance for MHS cable is 188Ω / km.

There are 2 ways to supply power to the module:

DCCONV module:

The module can be supplied with power from the control panel 24 VDC outputs, using the DCCONV unit. The minimum output voltage from the DCCONV power output is 23.5V. This voltage level is when the control panel is powered by battery only and the battery voltage is at its lowest possible level. Data regarding DCDOWN see chapter DC converter, DCCONV.

You can loose 3.5V to the cable (23.5 – 20).

With one CHQ-Z your cable resistance must be less then:

R = Ucable / Imax, where Ucable = 3.5V, Imax = 70mA
R = 3.5 / 0.07 = 50Ω.

Your maximum cable distance with one Zone module and one conductor pair for voltage
l = (1000m / 188Ω)* 50Ω
l = 266m

With the cable type MHS 1x4 when using **1 pair for voltage** you can connect **one Zone module (CHQ-Z)** at a maximum cable distance of 266m.
If you use 2 pairs for voltage you can connect **one Zone module (CHQ-Z)** at a maximum cable distance of 532m.

If you have **more the one Zone module (CHQ-Z)** on the same cable the maximum cable distance is divided by the count of Zone modules.

Separate 24VDC power supply with backup:

The power supply can also come from a separate 24 VDC power supply. The separate power supply must have battery backup in case of a power failure.



The voltage from this separate power supply must never go below 20V!

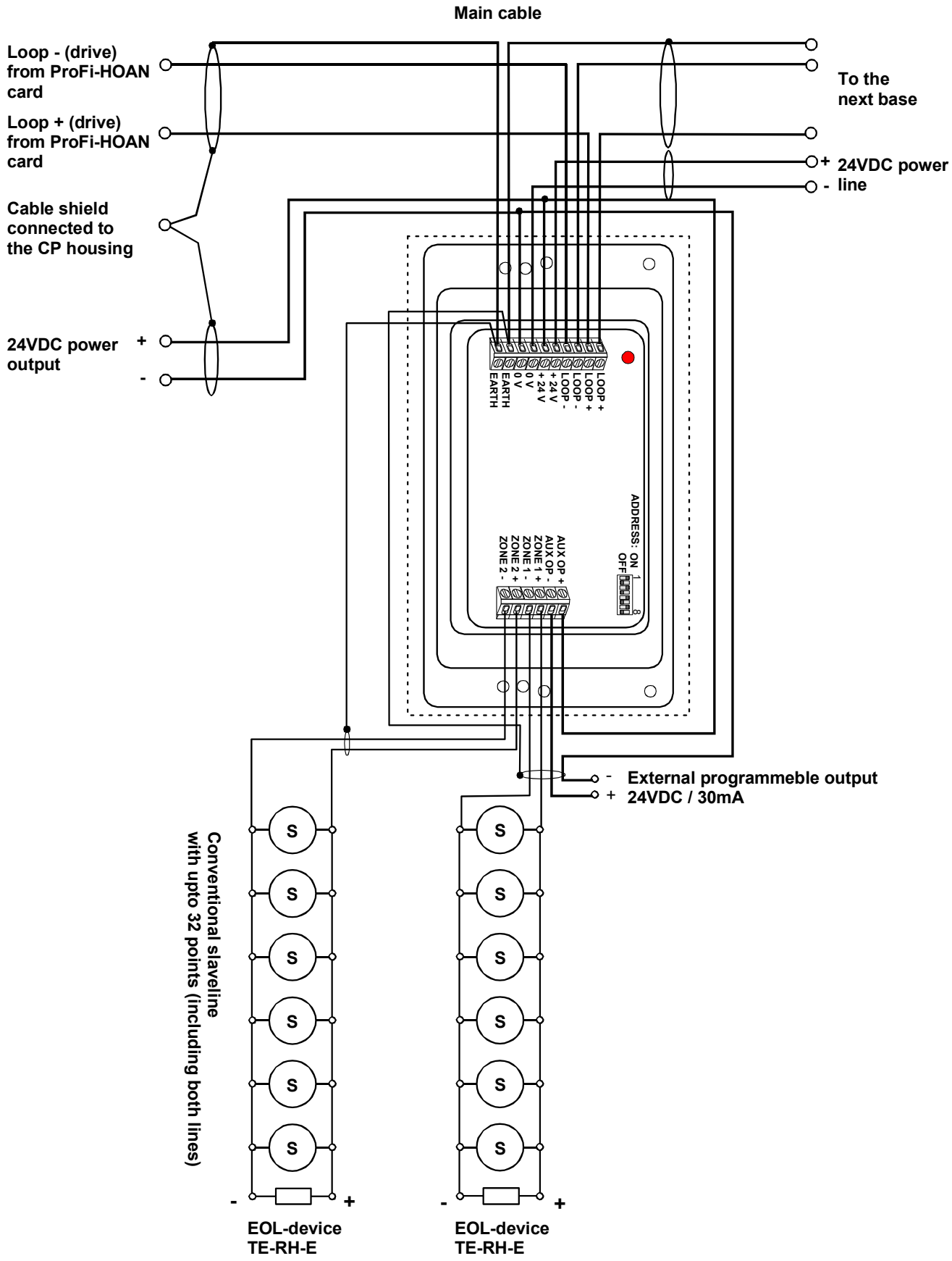
Main cable
Loop - (drive) from ProFi-HOAN card
Loop + (drive) from ProFi-HOAN card
Cable shield connected to the CP housing
24VDC power output
+
-
To the next base
+ 24VDC power
- line
LOOP +
LOOP +
LOOP -
LOOP -
+ 24 V
+ 24 V
0 V
0 V
EARTH
EARTH
ADDRESS: ON
OFF
1
8
AUX OP +
AUX OP -
ZONE 1 +
ZONE 1 -
ZONE 2 +
ZONE 2 -
- External programmeble output
+ 24VDC / 30mA
Conventional slaveline with upto 32 points (including both lines)
S
- +
EOL-device TE-RH-E
EOL-device TE-RH-E

Picture 6-14

6.2.7. Bell Module, CHQ-B

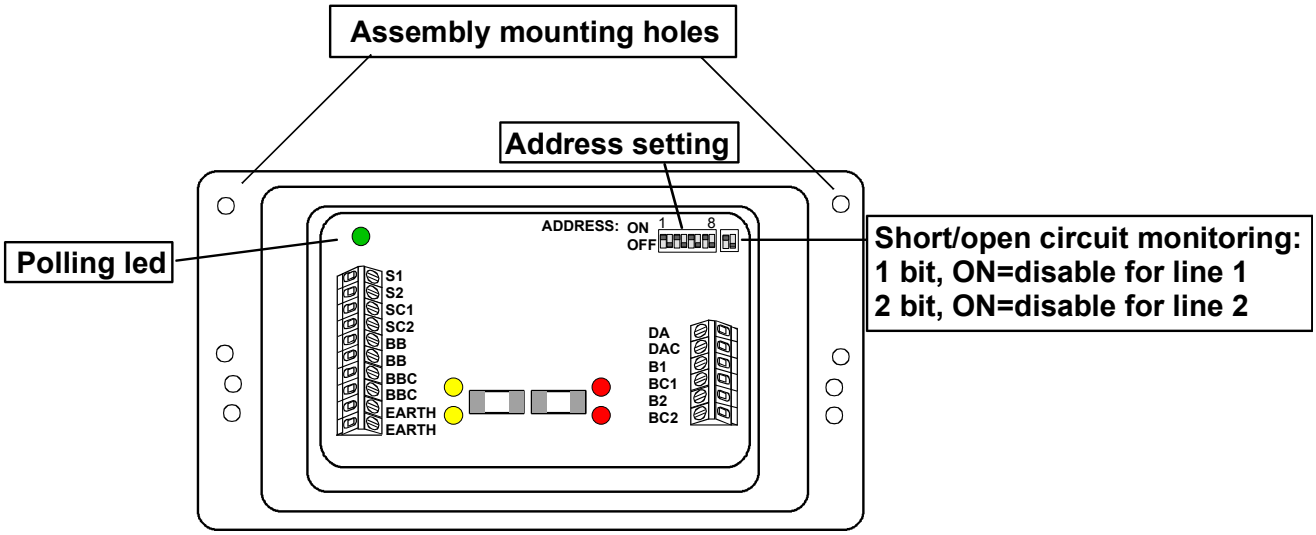

Picture 6-15

Maximum sounder cable capacitance is 0.3µF for the open/short circuit monitoring to operate correctly.

1. Drill cable entry holes in the box that you have chosen for this installation.
2. Ensure glands confirm to the ingress protection (IP-class) required.
3. Fit the CHQ-B module inside the mounting box CHQ-BOX-L.
4. Use the 4 holes in the corners of the CHQ-B to attach it to the box.
5. For this use 4 screws, 4 mm ∅.
6. Drag the cables through the cable entry holes of the box.
7. Cut the cables suitable for the module.
8. Peal the cables.
9. Peal the conductors so that there is no unisolated conductor outside the terminals.
10. Connect the conductors to the needed terminals.
11. Terminate the sounder lines with a 1kΩ resistors at the last sounder on the line.
12. Set the address with the 8-bit DIL-switch. See chapter

Picture 6-16

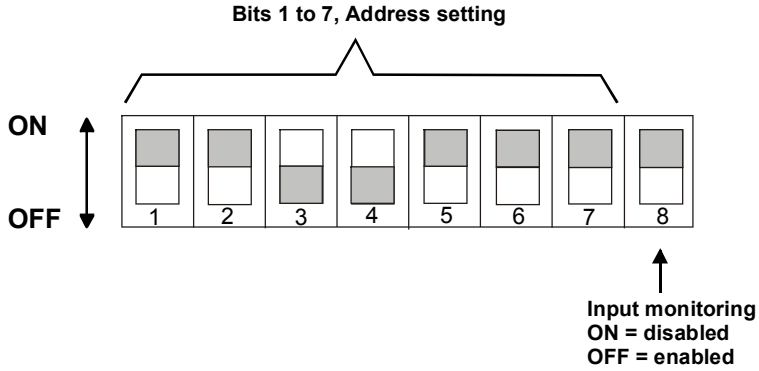

13. Terminate the input line with a 10kΩ resistor at the end of the input line (unless you want to disable short/open circuit monitoring).
14. Connect a 470Ω resistor in series with the actual input to be monitored.
15. The 8th bit of the address switch is set to ON if you want to disable the short/open circuit monitoring with the input (terminals DA, DAC).
16. Make sure that the short/open circuit monitoring for the sounder lines is enabled with the 2-bit DIL-switch.

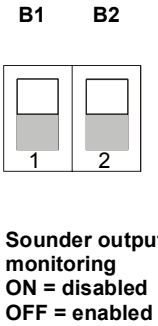

Picture 6-17

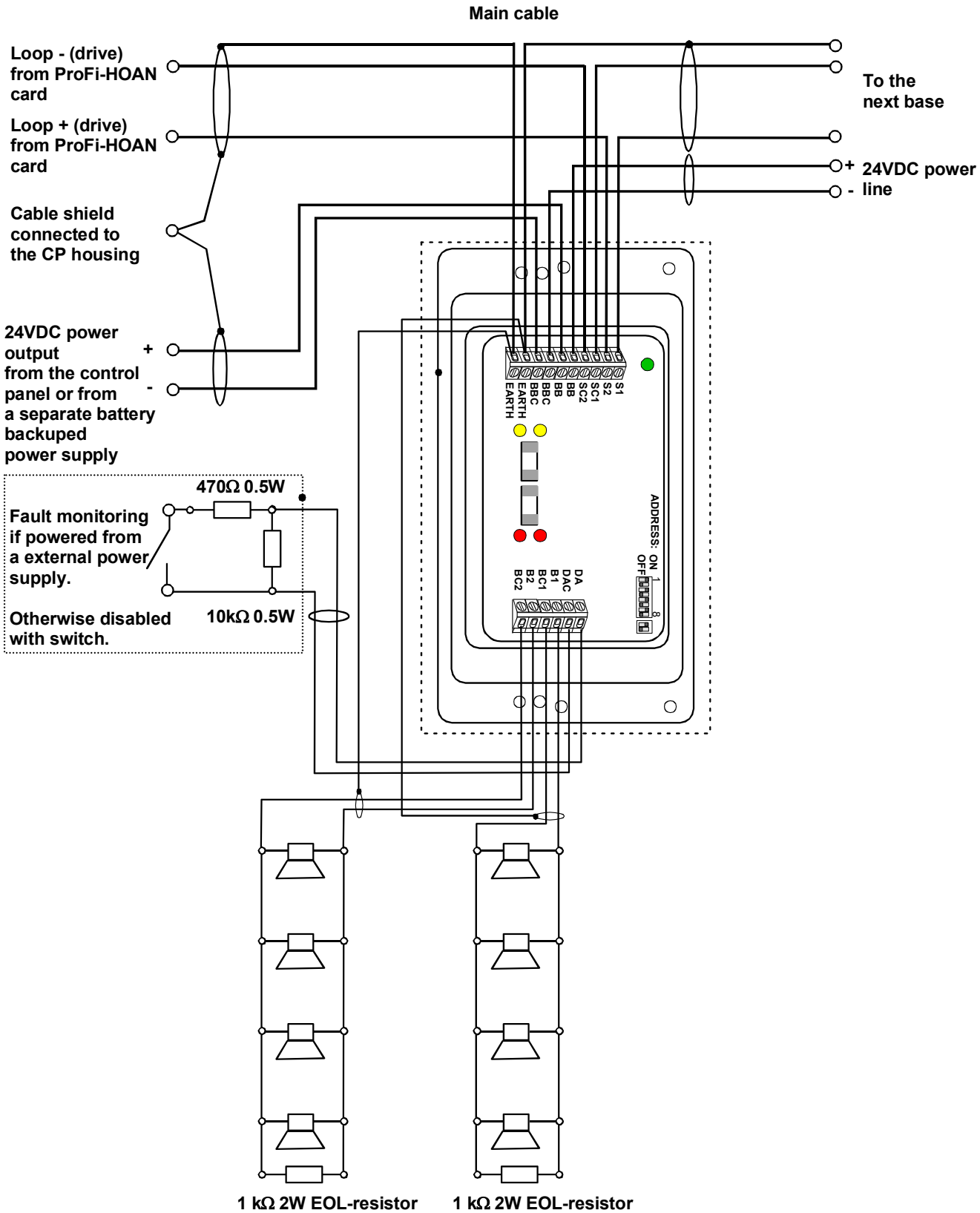
Main cable
Loop - (drive) from ProFi-HOAN card
Loop + (drive) from ProFi-HOAN card
Cable shield connected to the CP housing
24VDC power output from the control panel or from a separate battery backuped power supply
+
-
To the next base
+ 24VDC power
- line
470Ω 0.5W
Fault monitoring if powered from a external power supply.
Otherwise disabled with switch.
10kΩ 0.5W
EARTH
EARTH
BBC
BBC
BB
BB
SC2
SC1
S2
S1
BC2
B2
BC1
B1
DAC
DA
ADDRESS: ON
OFF
1 kΩ 2W EOL-resistor
1 kΩ 2W EOL-resistor

Picture 6-18

Power supply for the bell lines

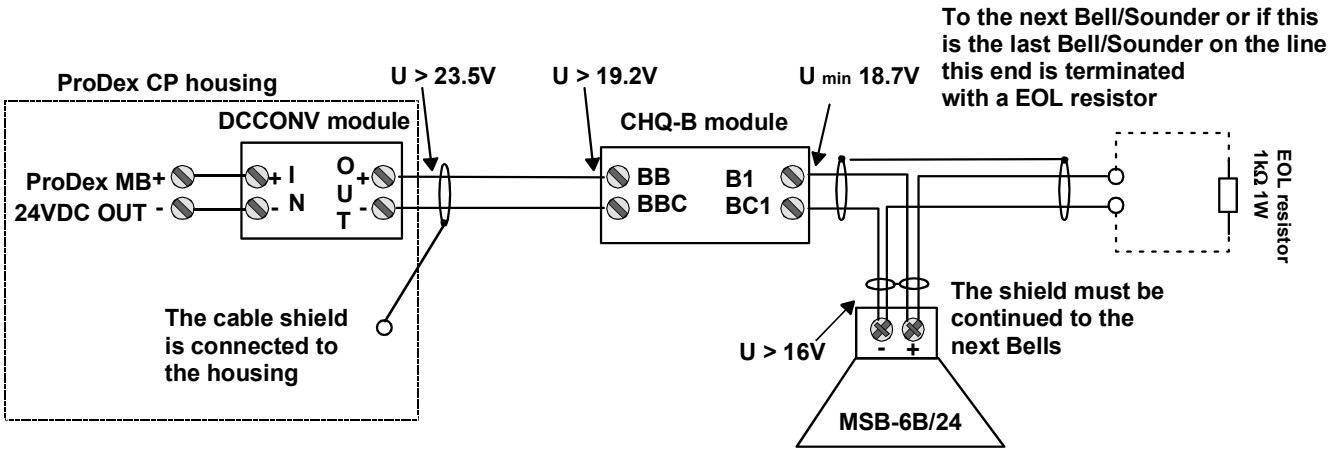

Picture 6-19

The voltage to the CHQ-B Bell module must be between 19.2 – 30 VDC.

Instead of normal loop cable you can use MHS-type cable for the power supply of the module.

The conductor pair resistance for MHS cable is 188Ω / km.

There are 2 ways to supply power to the module:

DCCONV module:

The module can be supplied with power from the control panel 24 VDC outputs, using the DCCONV unit. The minimum output voltage from the DCCONV power output is 23.5V. This voltage level is when the control panel is powered by battery only and the battery voltage is at its lowest possible level. Data regarding DCDOWN see chapter DC converter, DCCONV.

Calculating the distance from the power supply to the CHQ-B Bell module:

You can loose 4.3V to the cable between the DCCONV module and the CHQ-B module (23.5 – 19.2).

The maximum cable distance calculation depends on the used bell or sounder type.

The formula is:

$$l\,[m] = (1000 / (188 / c)) * 4.3 / (I_{total} + I_{EOL})$$

Where:
l is the maximum cable distance in meters to the Bell module.
c is the count of conductor pairs for the power supply of the bells.
I total is the total maximum current consumption of the bells or sounders connected to the cable.
I EOL is the current consumption of the EOL device, which is 20mA.

E.g.

You have a MSB-6B/24 Bell Imax (MSB)= 28 mA
The current consumption of the Bell module CHQ-B which is less then 1 mA can be ignored.

Your maximum cable distance between the DCConv module connected to the ProDex MB motherboard and the CHQ-B module with one conductor pair for voltage supply and one MSB-6B/24 Bell connected to the module is:
l = (1000m / 188Ω)* 4.3V/ (0.028A+0.02A)
l = 476m

With the cable type MHS 1x4 when using **2 pairs for voltage**:
You can connect **one Bell module (CHQ-B) with one MSB-6B/24 Bell connected to it** at a maximum cable distance of 952m.
If you have **4 MSB Bells** connected to the Bell module your maximum cable distance is 346m

Separate 24VDC power supply with backup:

The power supply can also come from a separate 24 VDC power supply. The separate power supply must have battery backup in case of a power failure.



The voltage from this separate power supply must never go below 19.2V

Calculating the distance between the CHQ-B Bell module and the last MSB Bell:

When the input voltage to the CHQ-B module is 19.2V (minimum), the Bell line output voltage is 18.7V.

The maximum cable distance calculation depends on the used bell or sounder type.

The formula is:

$$l\,[m] = (1000 / (188 / c)) * U_d / I_{total}$$

Where:
l is the cable distance in meters from the CHQ-B module to the last bell or sounder.
c is the count of conductor pairs for the power supply of the bells.
U d [V] is the voltage loss to the cabling (Output minimum – minimum Bell operating voltage).
I total [A] is the total maximum current consumption of the bells or sounders connected to the cable.

E.g.

Your maximum cable distance between the CHQ-B module and the MSB-Bell with one conductor pair for voltage supply to the CHQ-B module and one MSB-6B/24 Bell connected to the module is:

The minimum operating voltage of the MSB-6B/24 Bell is 16V, Imax = 28 mA.
You can loose 2.7V to the cable between the CHQ-B module output and the last MSB-bell on the line. (18.7V – 16V = 2.7V).

l = (1000m / 188Ω)* 2.7V / 0.028AΩ
l = 512m

With the cable type MHS 1x4 (2 pairs for voltage):
With **one MSB Bell** your maximum cable distance between the bell module and the bell is 1025m.
If you have **4 MSB Bells** you can connect them at a maximum cable distance of 256m.

6.2.8. Output module, CHQ-R

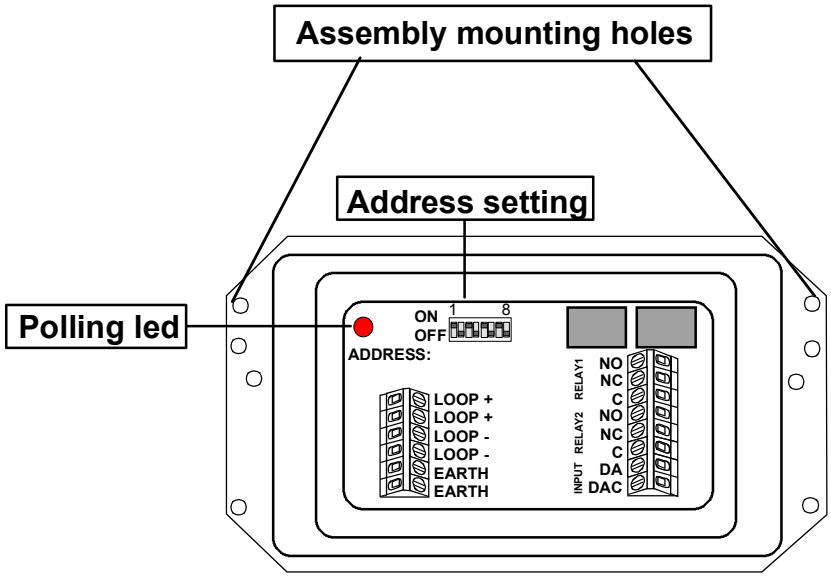

Picture 6-20

1. Drill cable entry holes in the box that you have chosen for this installation.
2. Ensure glands confirm to the ingress protection (IP-class) required.
3. Fit the CHQ-R module inside the mounting box CHQ-BOX-S.
4. Use the 4 holes in the corners of the CHQ-R to attach it to the box.
5. For this use 4 screws, 4 mm ∅.
6. Drag the cables through the cable entry holes of the box.
7. Cut the cables suitable for the module.
8. Peal the cables.
9. Peal the conductors so that there is no unisolated conductor outside the terminals.
10. Connect the conductors to the needed terminals.
11. The relays have terminals for both Normal Closed (NC) and Normal Open (NO) operation. The maximum load of the relays is 30 VDC / 1A.
12. Set the address with the 8-bit DIL-switch. See chapter

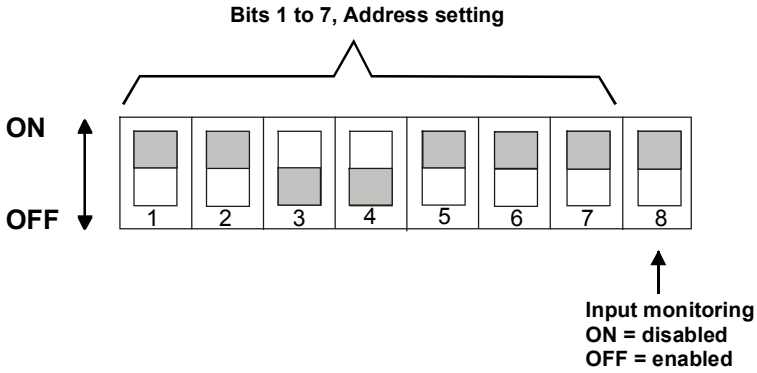

Picture 6-21

13. Terminate the input line with a 10kΩ resistor at the end of the input line (unless you want to disable short/open circuit monitoring).
14. Connect a 470Ω resistor in series with the actual input to be monitored.

15. The 8th bit of the address switch is set to ON if you want to disable the short/open circuit monitoring with the input (terminals DA, DAC).

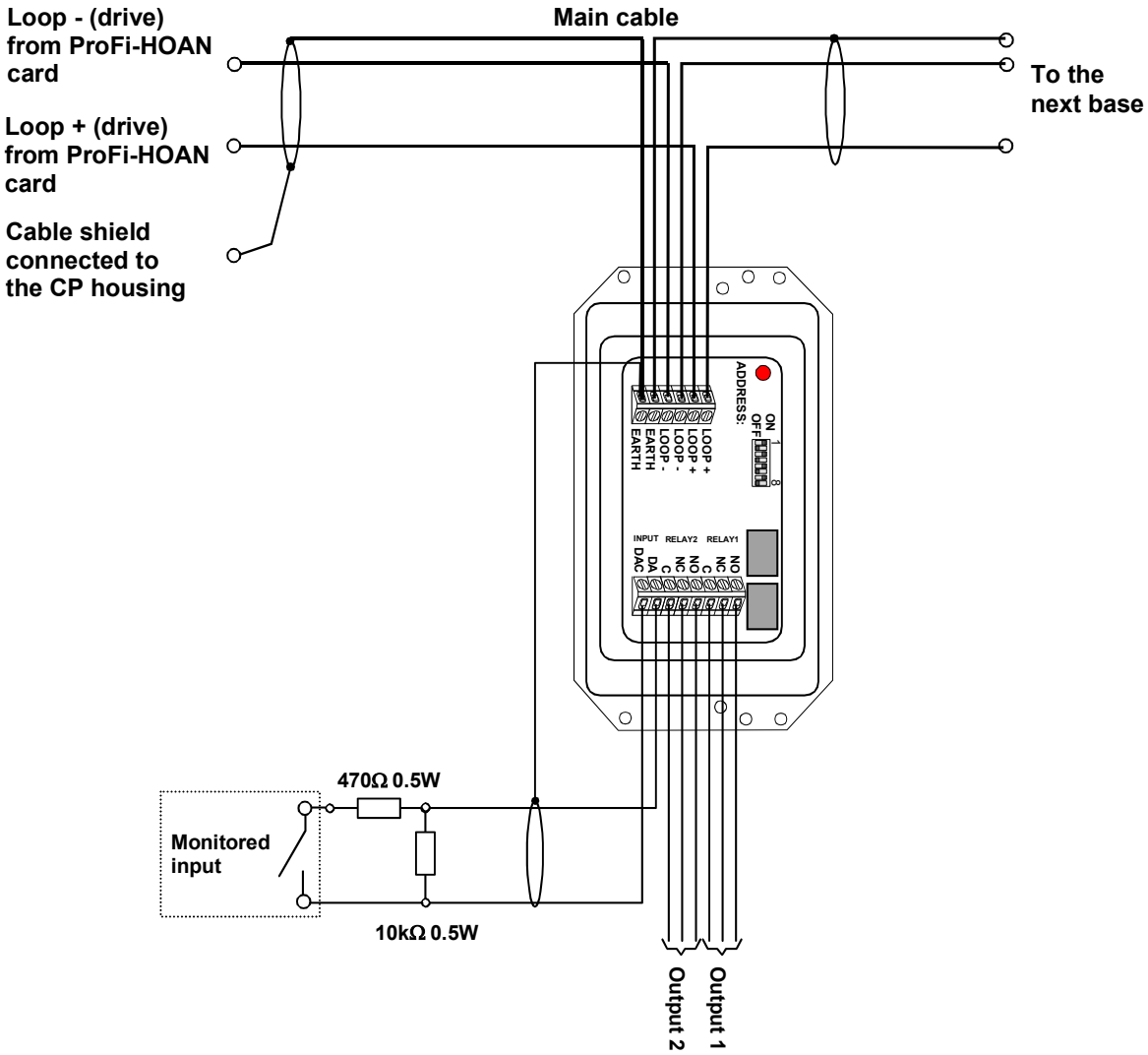

Picture 6-22

6.2.9. Switch module, CHQ-S

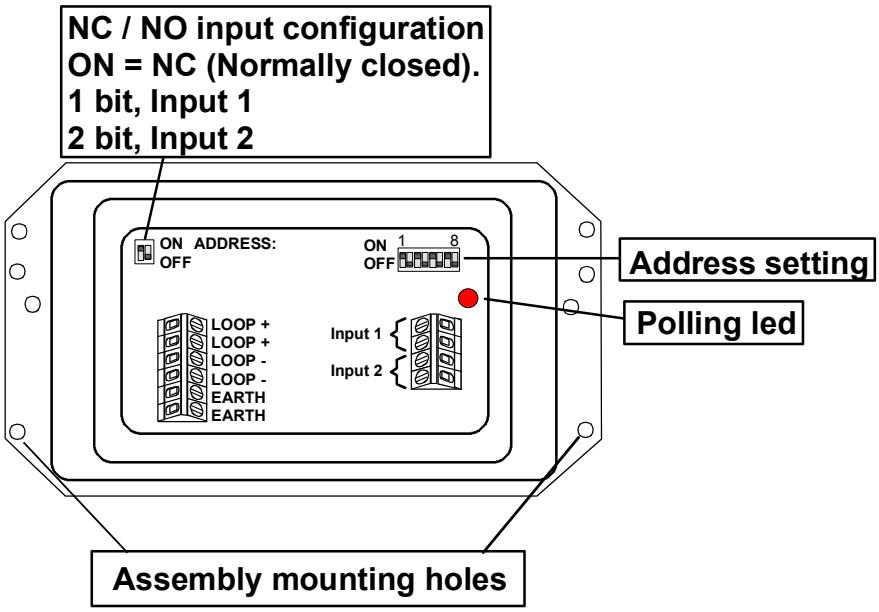

Picture 6-23

1. Drill cable entry holes in the box that you have chosen for this installation.
2. Ensure glands confirm to the ingress protection (IP-class) required.
3. Fit the CHQ-S module inside the mounting box CHQ-BOX-S.
4. Use the 4 holes in the corners of the CHQ-S to attach it to the box.
5. For this use 4 screws, 4 mm ∅.
6. Drag the cables through the cable entry holes of the box.
7. Cut the cables suitable for the module.
8. Peal the cables.
9. Peal the conductors so that there is no unisolated conductor outside the terminals.
10. Connect the conductors to the needed terminals.
11. Select the operation of the inputs, Normal Closed (NC) or Normal Open (NO). The selection is made with the 2-bit DIL-switch, bit 1 = input 1, bit 2 = input 2. ON = NC.
12. Set the address with the 8-bit DIL-switch. See chapter

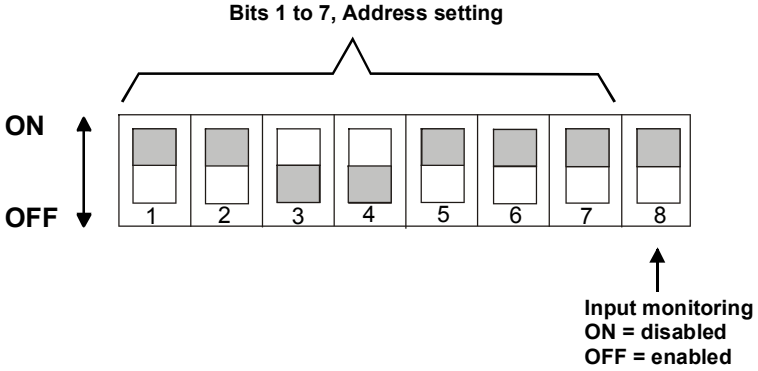

Picture 6-24

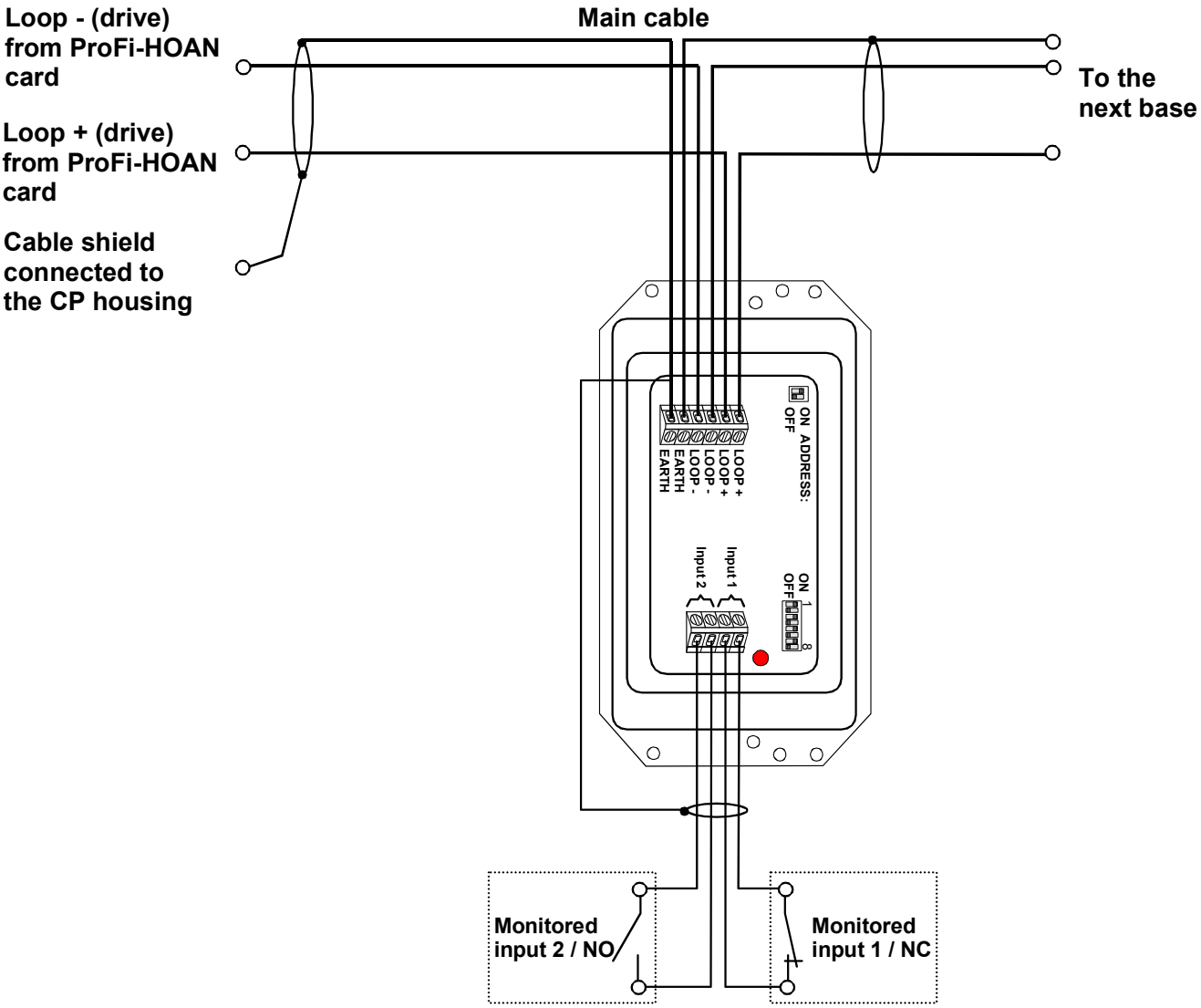
Loop - (drive) from ProFi-HOAN card
Loop + (drive) from ProFi-HOAN card
Cable shield connected to the CP housing
Main cable
To the next base
LOOP +
LOOP -
LOOP +
LOOP -
EARTH
EARTH
ON
OFF
ADDRESS:
Input 2
Input 1
ON
OFF
1
8
Monitored input 2 / NO
Monitored input 1 / NC

Picture 6-25

6.2.10. Single Input, Output module CHQ-SIO

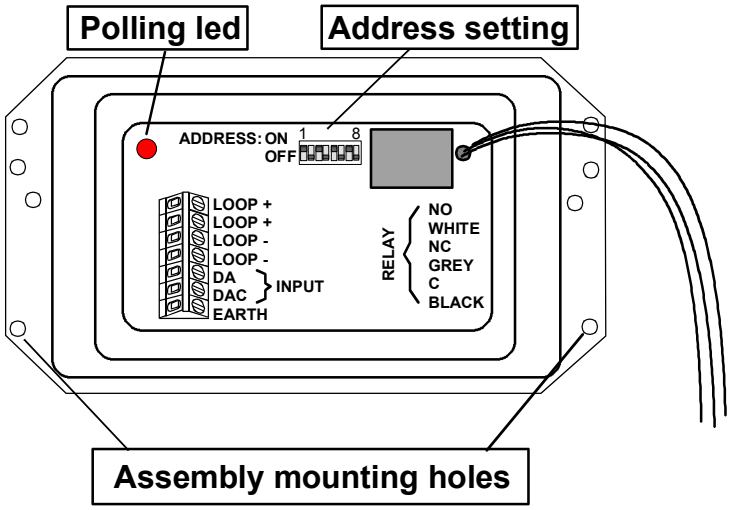

Picture 6-26

1. Drill cable entry holes in the box that you have chosen for this installation.
2. Ensure glands confirm to the ingress protection (IP-class) required.
3. Fit the CHQ-S module inside the mounting box CHQ-BOX-S.
4. Use the 4 holes in the corners of the CHQ-S to attach it to the box.
5. For this use 4 screws, 4 mm ∅.
6. Drag the cables through the cable entry holes of the box.
7. Cut the cables suitable for the module.
8. Peal the cables.
9. Peal the conductors so that there is no unisolated conductor outside the terminals.
10. Connect the conductors to the needed terminals.
11. Set the address with the 8-bit DIL-switch. See chapter

Bits 1 to 7, Address setting

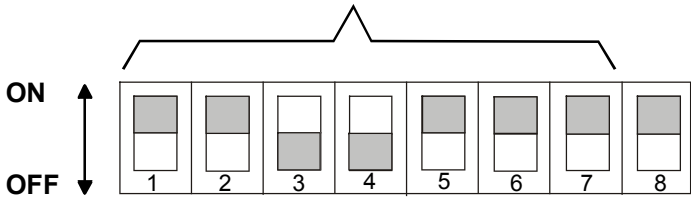

Picture 6-27

13. Terminate the input line with a 10kΩ resistor at the end of the input line (unless you want to disable short/open circuit monitoring).
14. Connect a 470Ω resistor in series with the actual input to be monitored.
15. The 8th bit of the address switch is set to ON if you want to disable the short/open circuit monitoring with the input (terminals DA, DAC).

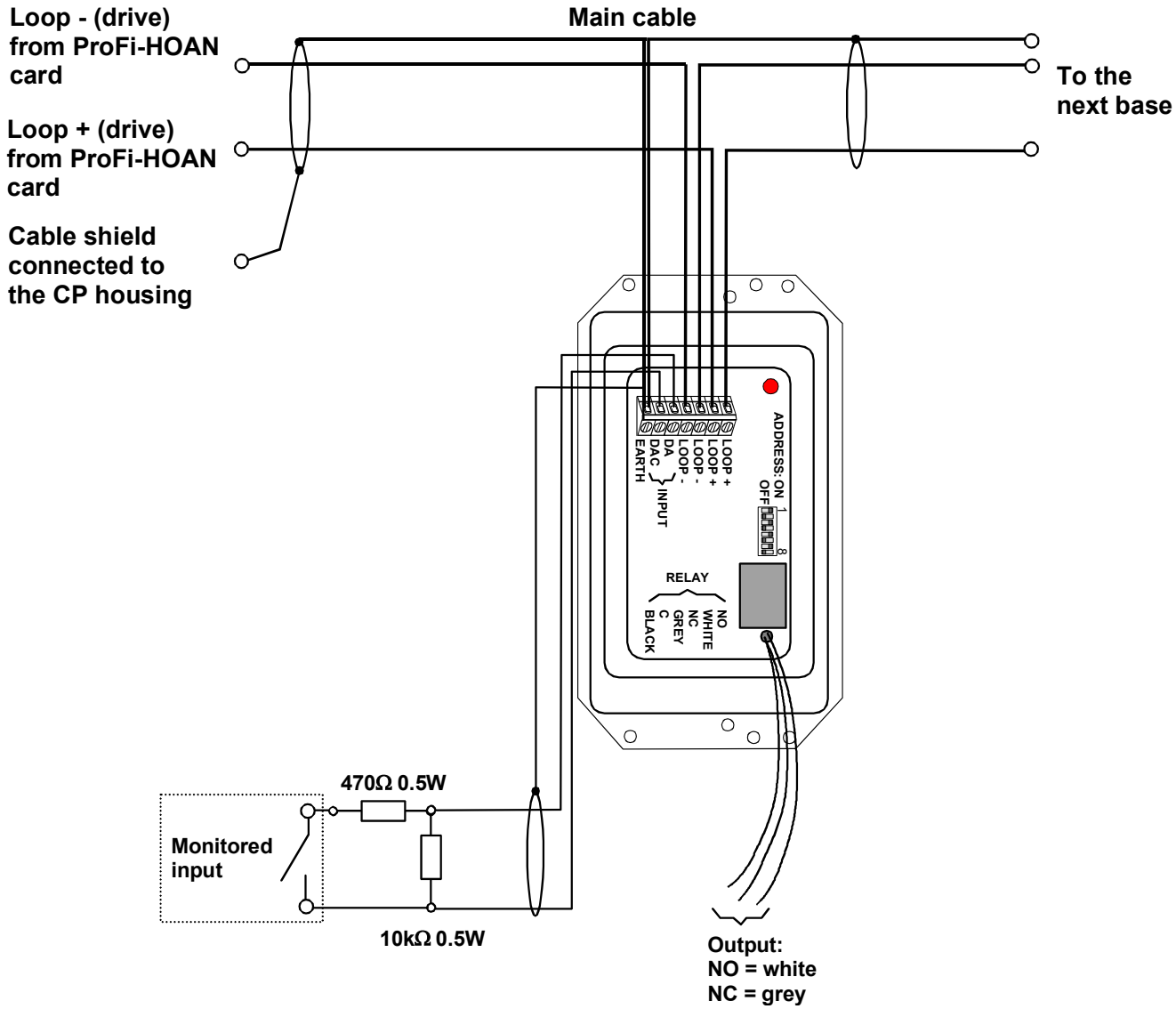
Loop - (drive) from ProFi-HOAN card
Loop + (drive) from ProFi-HOAN card
Cable shield connected to the CP housing
Main cable
To the next base
LOOP +
LOOP +
LOOP -
LOOP -
DA
DAC
EARTH
INPUT
ADDRESS: ON
OFF
1
8
RELAY
NO
WHITE
NC
GREY
C
BLACK
470Ω 0.5W
Monitored input
10kΩ 0.5W
Output:
NO = white
NC = grey

Picture 6-28

6.2.11. Manual call point, MCP-E

This unit is for indoor use only.

MCP-E from front:

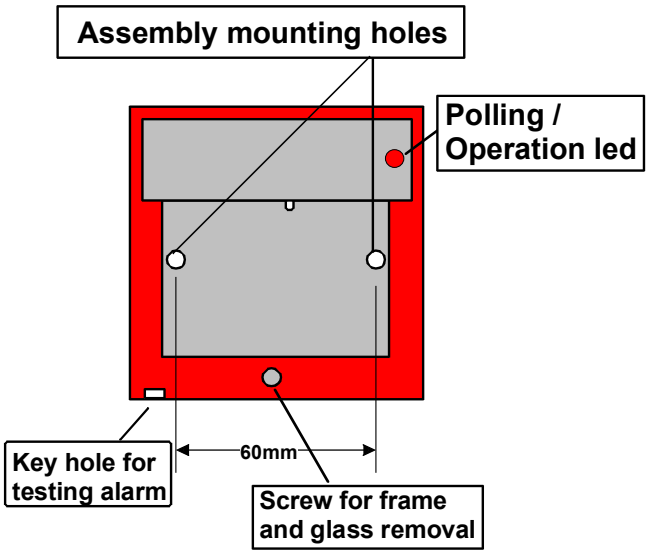

MCP-E from rear:

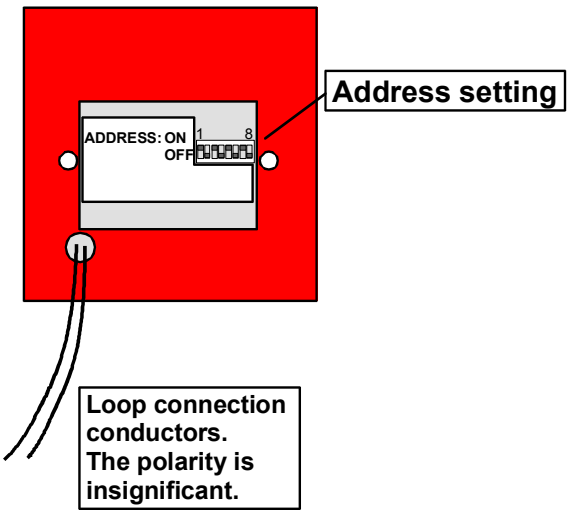

Picture 6-29

1. Surface mounting: Drill a cable entry hole in the SR3T mounting box. For this use the tear off template (a part of the packing box).

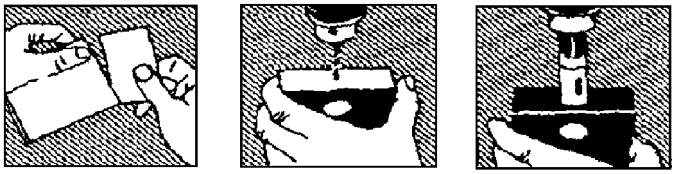

2. Flush mounting: The call point unit fits in a standard switch / socket box having standard 60 mm horizontal fixing centres.
3. Drag the cable through the mounting box cable entry.
4. Cut the cable suitable for the connection.
5. Peal the cable.
6. Peal the conductors so that there is no unisolated conductor outside the terminals.
7. Set the address with the 8-bit DIL-switch. See chapter.
8. Connect the loop +, loop – and the shield conductors to the 3 terminals of the SR3T mounting box.
9. Connect the conductors of the call point to the loop terminals.
10. Open the call point unit by loosening the screw under the glass (in the middle). Grab the plastic frame from the bottom and lift it up, remove the glass.
11. The call point is attached to the mounting box with 4 mm ∅ machine screws, which are provided. These fixing holes are on 60 mm distance, placed on both sides of the housing.
12. The GS-element isn't to be removed until the installation is finished and the system is set up. The GS-element is replaced with a breakable glass.

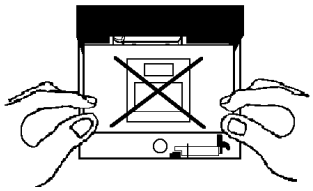

Picture 6-30

Testing:

To test the call point insert the supplied test key into the aperture at the bottom of the unit, the glass will drop and simulate operation of the call point. To reset remove the key.

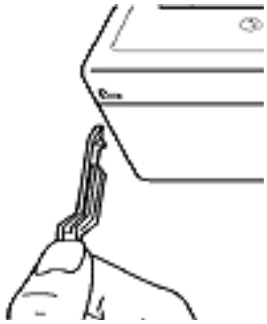

Picture 6-31

6.2.12.

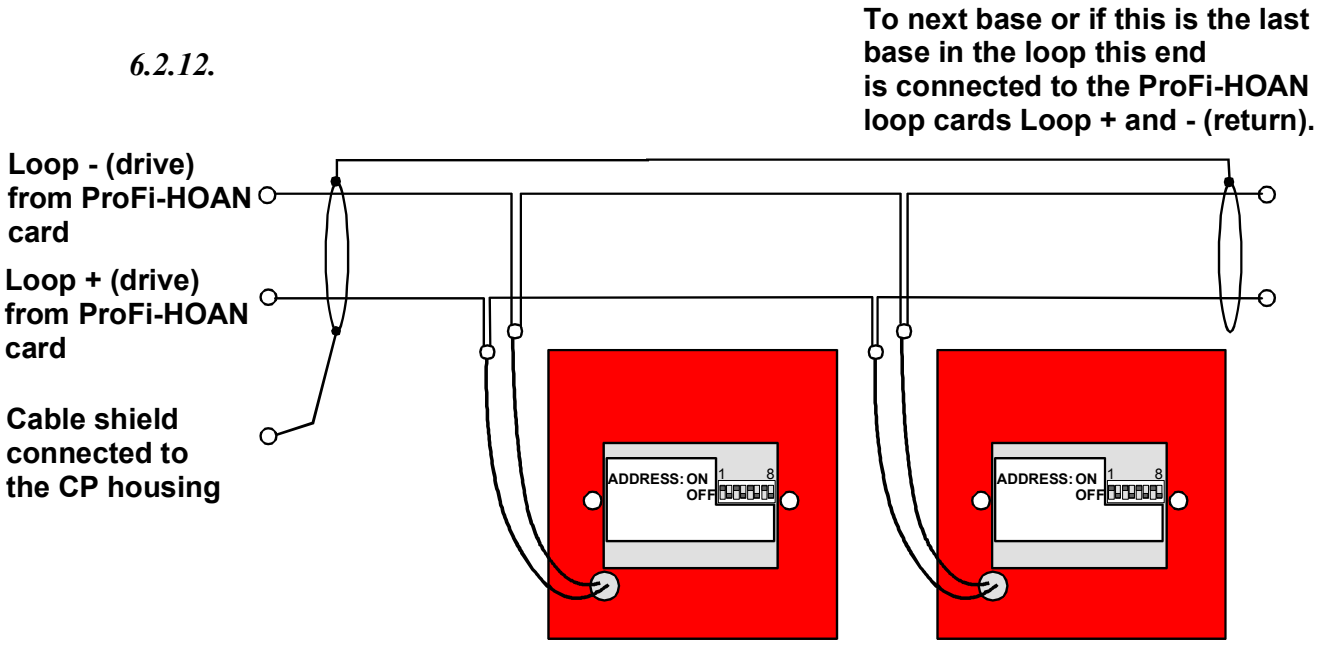

Picture 6-32

Setting the address

The address setting must be made at system start-up, or when adding a new point to the loop. The right address for a point is defined by the installation plan / location map. Each point has it's own address in order for the system to separate the points. Every point has to have its unique address. All analog sensors have an EEPROM for the address setting. Their address is set with the address programmer TCH-B100. If the base sounder is installed separately its address is also set with the address programmer.

The address setting of the units and devices is read only when the unit is powered up! You must disconnect the power to the modules and call points before the new address settings are activated.

The TCH-B100 address programmer

The programmer uses a PP3 size 9V battery. The battery capacity gives up to 8000 operations.



Picture 6-33

The programmer supports the following devices:

- ACA-E, multi sensor.
- AIE-E, ionisation smoke sensor.
- ALG-E, photoelectric smoke sensor.
- ATG-E, heat sensor.
- CHQ-BS, loop powered base sounder.

Keys functions:

- Left (grey key) key - Power On - automatically reads the address of the fitted sensor - subsequent operations of this key will advance the programmer address in units of 10.
- Right (grey key) key - Advances the programmer address display in units of 1. Also used as the Power Off button.
- Middle (red key) key - Stores the displayed address to the Sensor and is used to read the Sensor's analogue levels.

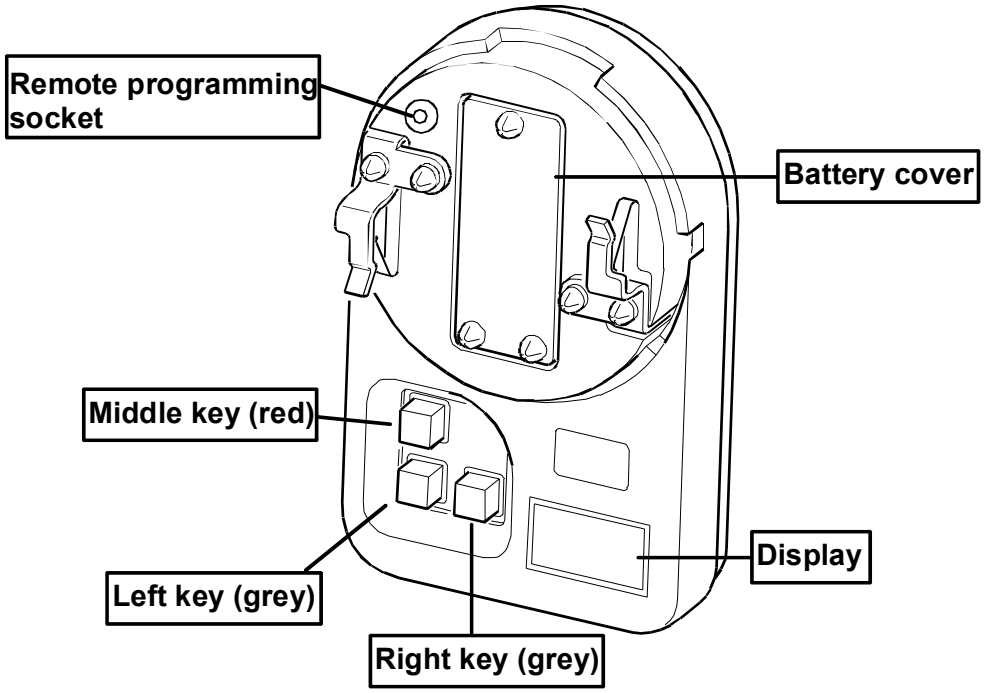

Picture 6-34

Programming a device:

- Locate the Sensor onto the programmer ensuring the 3 locating pips line up with the grooves in the programmer. The sensor alignment mark is positioned towards the red button of the programmer.
- Press the left (grey) key to switch the programmer on, a battery check message will be displayed followed by the address of the Sensor fitted (previously un-programmed Sensors will read 127).
- Select the required address by incrementing the programmer display (left grey key, 10's, right grey key, units). Whilst the display is showing an address different to that stored in the Sensor, 3 dots will also flash.
- Once the wanted address is displayed press the upper (red) key to store the address in the Sensor. Once the address is correctly stored the 3 dots will cease to flash and the display will show the address set.

To program a CHQ-BS the enclosed lead must be used, firstly connect the plug in to the remote programming socket and connect the black croc clip to the C terminal, and the red croc clip to the L terminal on the base sounder. The address can now be programmed as described above.

Only a separate base sounder without a sensor on it requires an address set with the programmer. If the base sounder is used as a base for a sensor the base sounder automatically gets its address from the control panel.

Remote Programming Socket:



Picture 6-35

The remote programming socket allows the user to program Loop powered sounders (CHQ-BS). The Jack socket is wired as the diagram below.

Connect the CHQ-BS with the cable, as shown in the picture above. The programming is done the same way as for the sensors.

The 8-bit address switch

The address of the different modules is set with an 8-bit DIL-switch. Only the 7 first switches are used for address setting. The possible address settings are:

Switch							
1	2	3	4	5	6	7	Addr
X							1
	X						2
X	X						3
		X					4
X		X					5
	X	X					6
X	X	X					7
			X				8
X			X				9
	X		X				10
X	X		X				11
		X	X				12
X		X	X				13
	X	X	X				14
X	X	X	X				15
				X			16
X				X			17
	X			X			18
X	X			X			19
		X		X			20
X		X		X			21
	X	X		X			22
X	X	X		X			23
			X	X			24
X			X	X			25
	X		X	X			26
X	X		X	X			27
		X	X	X			28
X		X	X	X			29
	X	X	X	X			30
X	X	X	X	X			31
					X		32
X					X		33
	X				X		34
X	X				X		35
		X			X		36
X		X			X		37
	X	X			X		38
X	X	X			X		39
			X		X		40
X			X		X		41
	X		X		X		42

Switch							
1	2	3	4	5	6	7	Addr
X	X		X		X		43
		X	X		X		44
X		X	X		X		45
	X	X	X		X		46
X	X	X	X		X		47
				X	X		48
X				X	X		49
	X			X	X		50
X	X			X	X		51
		X		X	X		52
X		X		X	X		53
	X	X		X	X		54
X	X	X		X	X		55
			X	X	X		56
X			X	X	X		57
	X		X	X	X		58
X	X		X	X	X		59
		X	X	X	X		60
X		X	X	X	X		61
	X	X	X	X	X		62
X	X	X	X	X	X		63
						X	64
X						X	65
	X					X	66
X	X					X	67
		X				X	68
X		X				X	69
	X	X				X	70
X	X	X				X	71
			X			X	72
X			X			X	73
	X		X			X	74
X	X		X			X	75
		X	X			X	76
X		X	X			X	77
	X	X	X			X	78
X	X	X	X			X	79
				X		X	80
X				X		X	81
	X			X		X	82
X	X			X		X	83
		X		X		X	84

Switch							
1	2	3	4	5	6	7	Addr
X		X		X		X	85
	X	X		X		X	86
X	X	X		X		X	87
			X	X		X	88
X			X	X		X	89
	X		X	X		X	90
X	X		X	X		X	91
		X	X	X		X	92
X		X	X	X		X	93
	X	X	X	X		X	94
X	X	X	X	X		X	95
					X	X	96
X					X	X	97
	X				X	X	98
X	X				X	X	99
		X			X	X	100
X		X			X	X	101
	X	X			X	X	102
X	X	X			X	X	103
			X		X	X	104
X			X		X	X	105
	X		X		X	X	106
X	X		X		X	X	107
		X	X		X	X	108
X		X	X		X	X	109
	X	X	X		X	X	110
X	X	X	X		X	X	111
				X	X	X	112
X				X	X	X	113
	X			X	X	X	114
X	X			X	X	X	115
		X		X	X	X	116
X		X		X	X	X	117
	X	X		X	X	X	118
X	X	X		X	X	X	119
			X	X	X	X	120
X			X	X	X	X	121
	X		X	X	X	X	122
X	X		X	X	X	X	123
		X	X	X	X	X	124
X		X	X	X	X	X	125
	X	X	X	X	X	X	126
X	X	X	X	X	X	X	127

X = ON = OFF

Picture 6-36

6.3. Conventional points

6.3.1. A few examples

These examples are made with the common base YBN-R/4

The conventional loop is always a branch. This branch can't have sub branches.

After the last point on the loop you must always terminate the loop. This is done with the EOL-device TE-RH-E.

The first example is with the ProDex HOCO loop card, which is a card to be attached directly to the control panel main board. The card has 8 separate loops to which you can connect up to 32 points / loop.

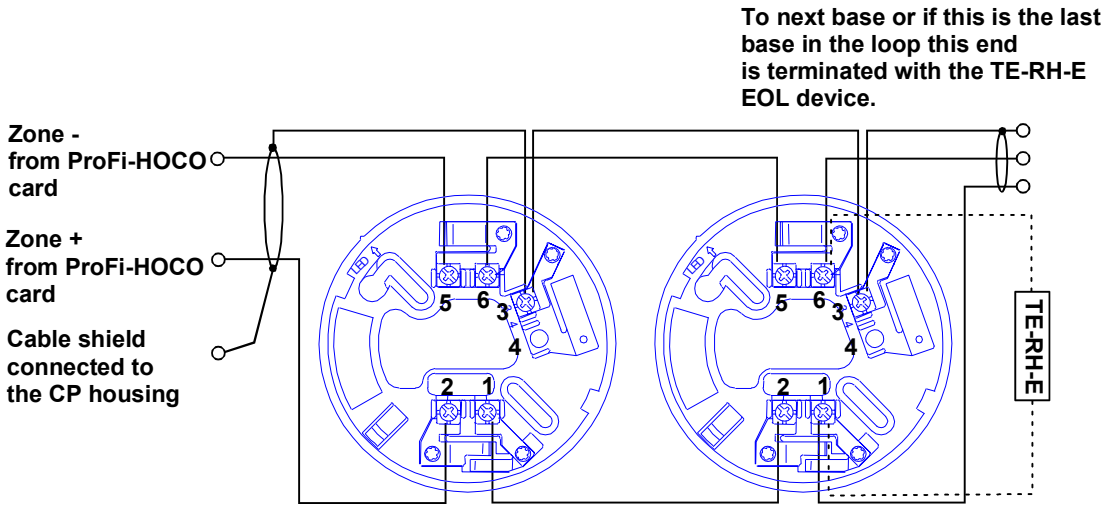

Picture 6-37

The second example is with the Mini zone module CHQ-MZ. This module can be used to connect up to 6 conventional detectors to an analog loop.

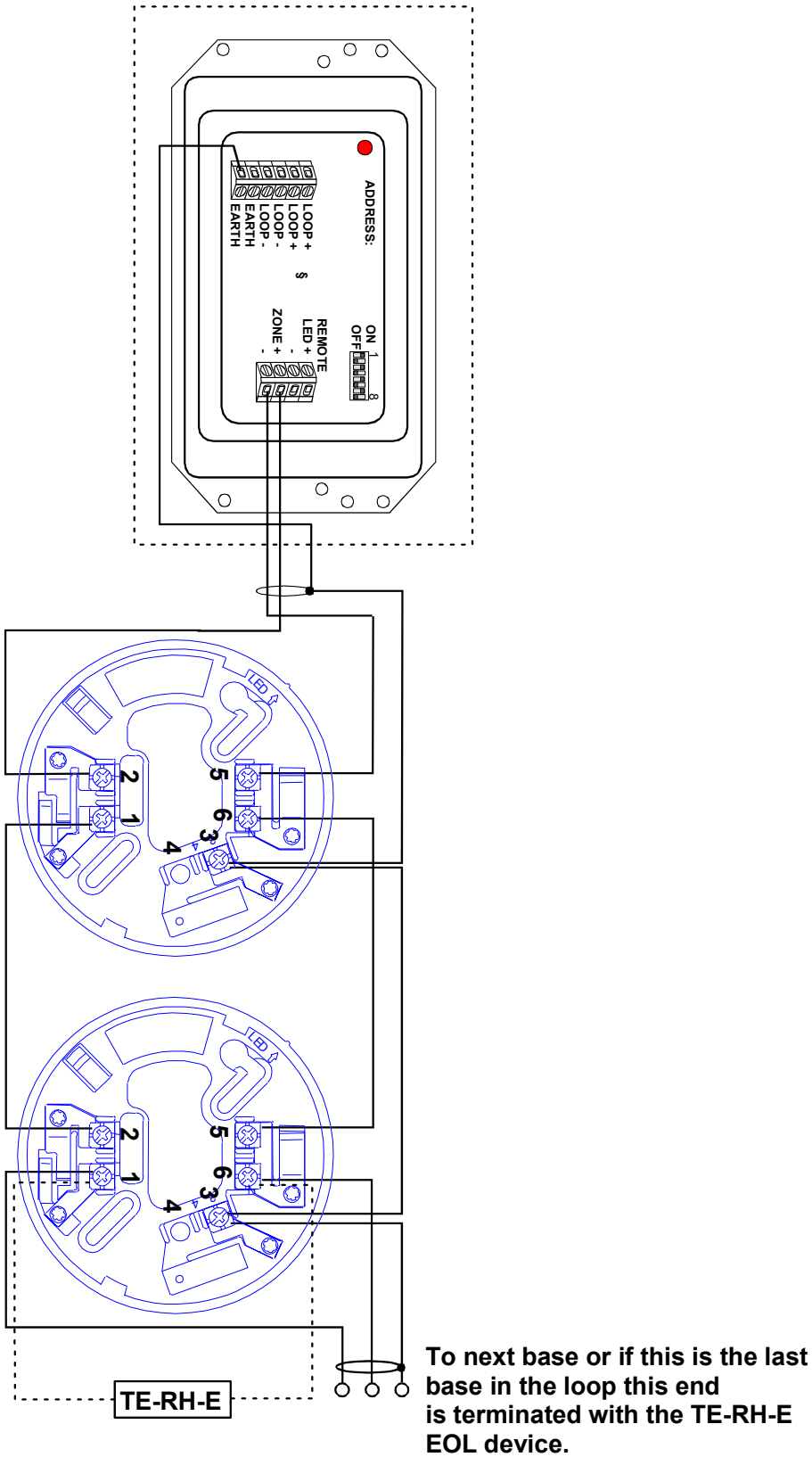

Picture 6-38

The third example is with the Zone module CHQ-Z. This module can be used to connect 2 conventional zones with up to 30 detectors/zone to an analog loop.

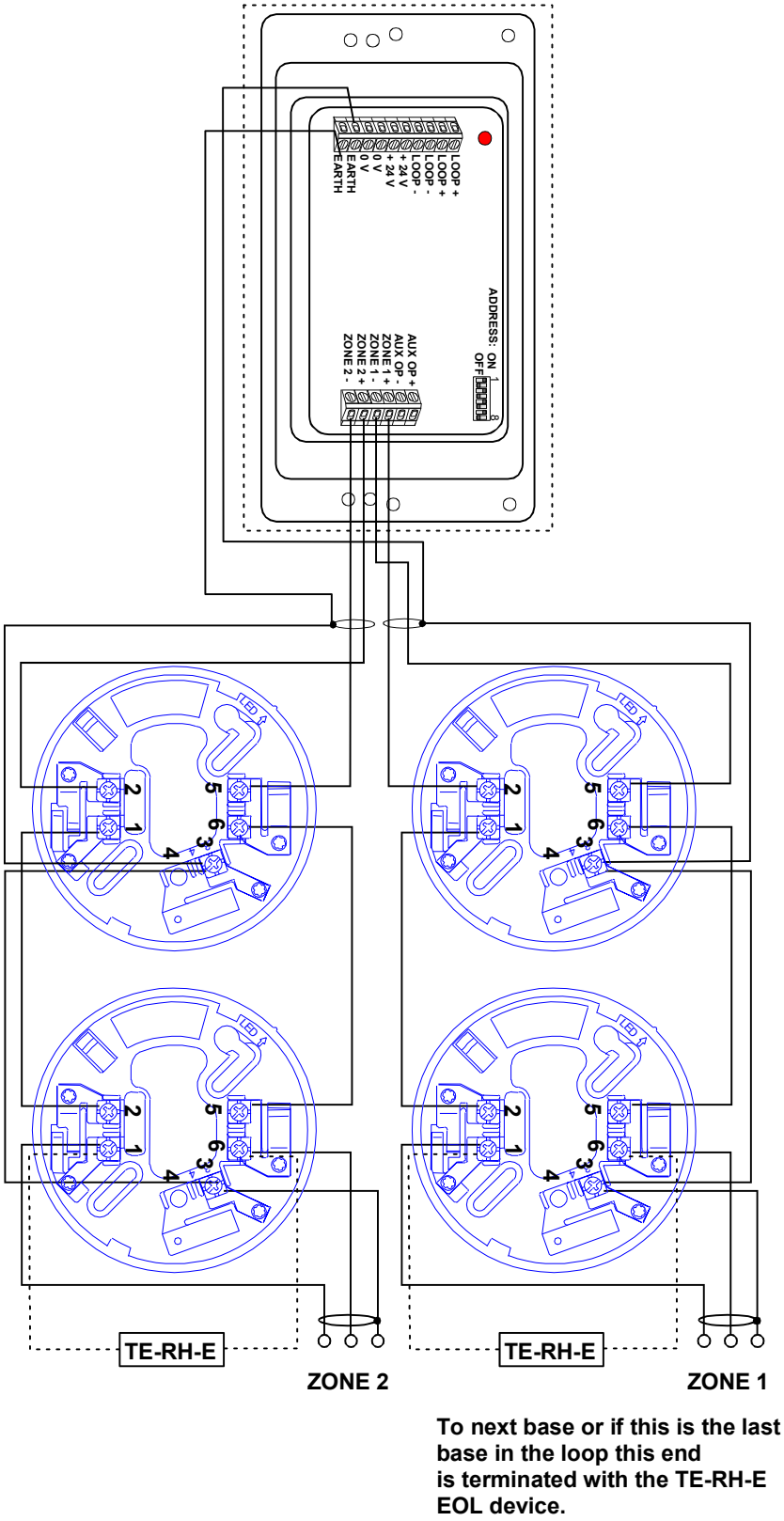

Picture 6-39

6.3.2. The common base YBN-R/4

Installation:

1. Use 3 mm ∅ screws.
2. Drill 2 holes on a distance of 48 – 74 mm for the screws or screw plugs.
3. The two holes are to be drilled so that the cable lead-through is in the middle.
4. Drag the cable through the base cable entry.
5. Cut the cable suitable for the base.
6. Mount the base with 2 screws, 3 mm ∅.
7. Peal the cable.
8. Peal the conductors so that there is no unisolated conductor outside the terminals.
9. Connect the conductors to the needed terminals.
10. Attach the sensor to the base. Both base and sensor has an alignment mark which helps to find the right position for the sensor. The sensor is inserted to the base with the alignment marks about 15° apart from each other (the base mark clockwise from the sensor mark). When the sensor is inserted right, you twist the sensor clockwise until the alignment marks are facing each other.

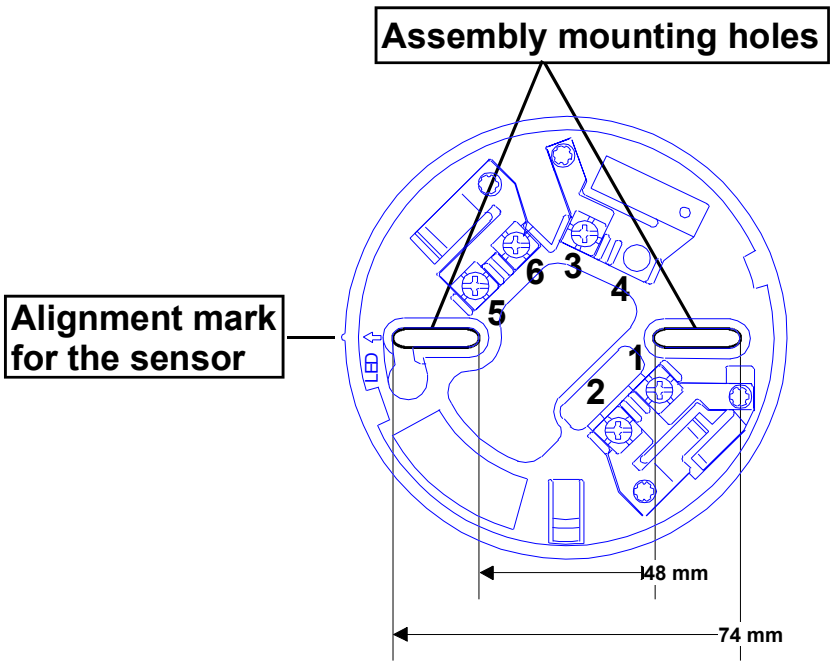

Picture 6-40

The connection terminals of the base:

1. Loop +, OUT
2. Loop +, IN
3. Earth
4. Not in use
5. Loop –
6. Loop –

6.3.3. The common base with remote fire led output YBO-R/5

Installation:

1. Use 3 mm ∅ screws.
2. Drill 2 holes on a distance of 48 – 74 mm for the screws or screw plugs.
3. The two holes are to be drilled so that the cable lead-through is in the middle.
4. Drag the cable through the base cable entry.
5. Cut the cable suitable for the base.
6. Mount the base with 2 screws, 3 mm ∅.
7. Peal the cable.
8. Peal the conductors so that there is no unisolated conductor outside the terminals.
9. Connect the conductors to the needed terminals.
10. Attach the sensor to the base. Both base and sensor has an alignment mark which helps to find the right position for the sensor. The sensor is inserted to the base with the alignment marks about 15° apart from each other (the base mark clockwise from the sensor mark). When the sensor is inserted right, you twist the sensor clockwise until the alignment marks are facing each other.

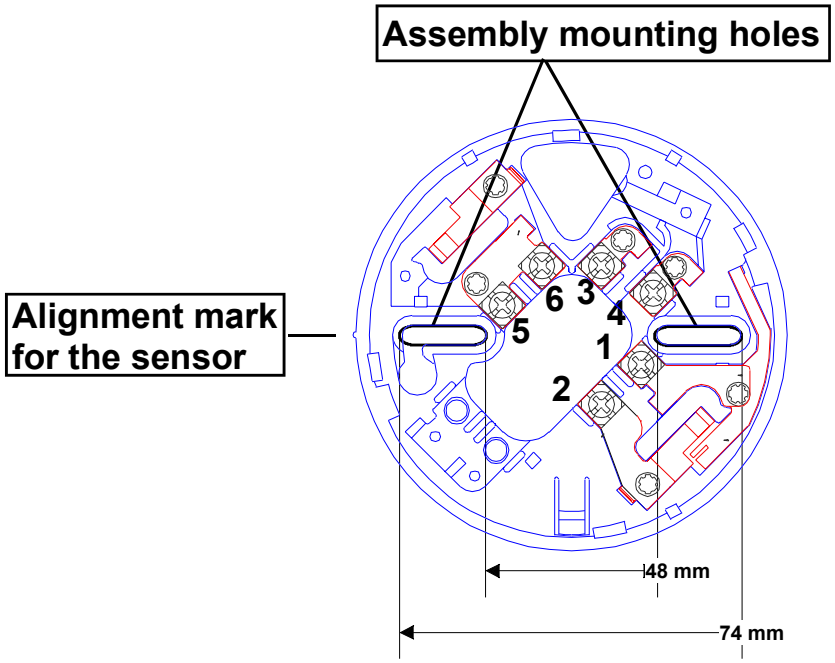

Picture 6-41

The connection terminals of the base:

1. Loop +, OUT
2. Loop +, IN, Remote LED +
3. Screen
4. Remote LED –
5. Loop –
6. Loop –

6.3.4. Common base for SLK-EN sensor, YBF-RL/4H5

Installation:

1. Use 3 mm ∅ screws.
2. Drill 2 holes on a distance of 48 – 74 mm for the screws or screw plugs.
3. The two holes are to be drilled so that the cable lead-through is in the middle.
4. Drag the cable through the base cable entry.
5. Cut the cable suitable for the base.
6. Mount the base with 2 screws, 3 mm ∅.
7. Peal the cable.
8. Peal the conductors so that there is no un-isolated conductor outside the terminals.
9. Connect the conductors to the needed terminals.
10. Attach the sensor to the base.

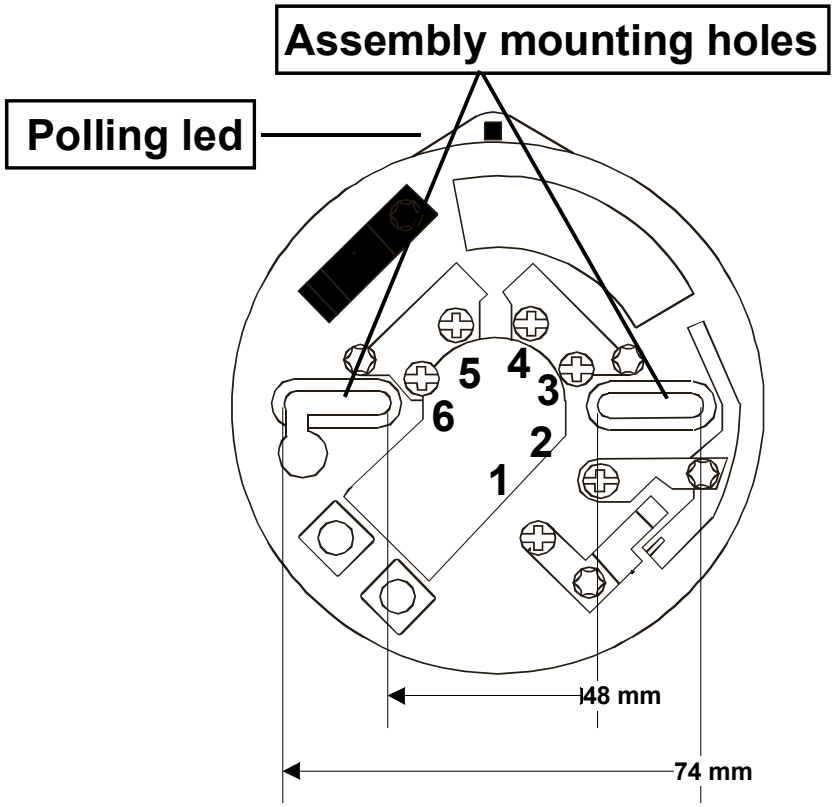

Picture 6-42

The connection terminals of the base:

1. Loop +, OUT
2. Loop +, IN
3. Remote led
4. Remote led
5. Loop –
6. Loop –

6.3.5. Waterproof fixed temperature heat detector, DFG-60E

Installation:

1. Use 3 mm ∅ screws.
2. Drill 2 holes on a distance of 70 mm for the screws or screw plugs.
3. The two holes are to be drilled so that the cable lead-through is in the middle.
4. Cut the cable suitable for the detector.
5. Peal the cable.
6. Peal the cable conductors so that there is no un-isolated conductor outside the terminals.
7. Connect the cable conductors to the needed conductors of the detector.
8. Mount the detector with 2 screws, 3 mm ∅.

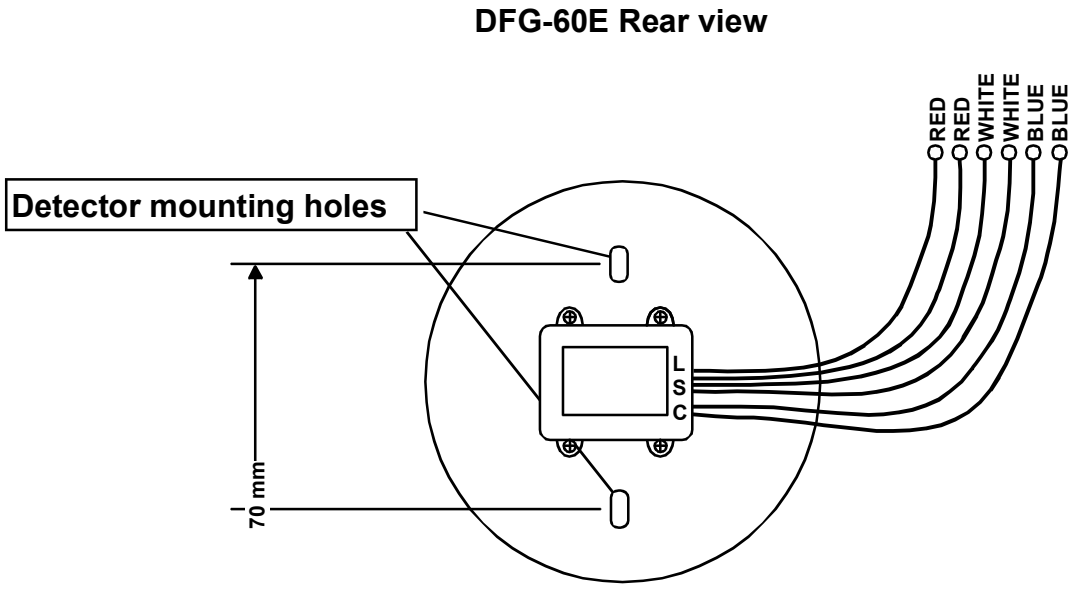

Picture 6-43

The connection terminals of the base:

Red = Loop +, OUT
Red = Loop +, IN
White = Remote led -
White = Remote led - spare
Blue = Loop –
Blue = Loop –

6.3.6. Manual call point, CXL/G/R/BB

CXL/G/R/BB from front: ***CXL/G/R/BB from rear:***

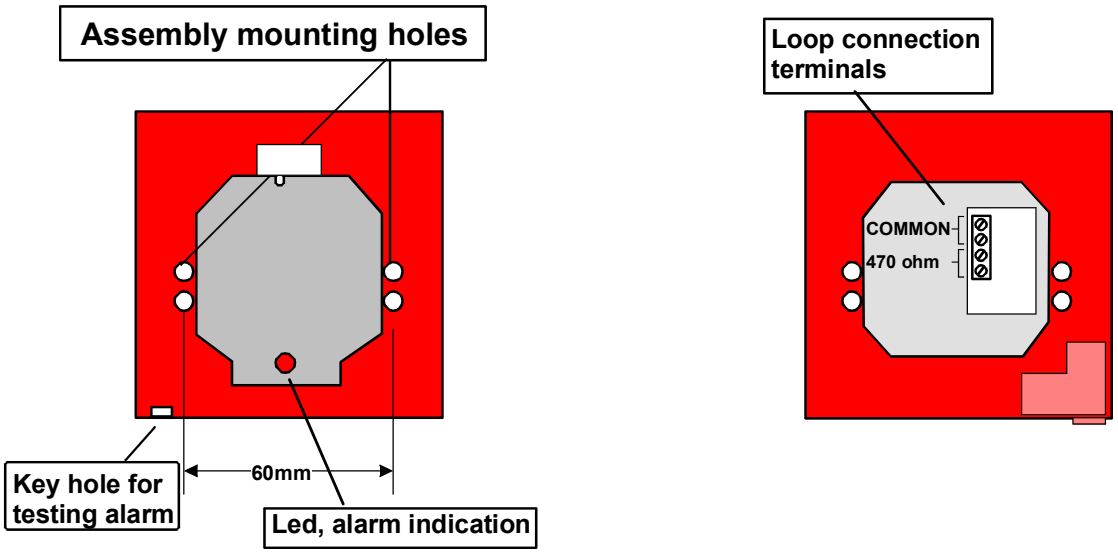

Picture 6-44

1. Surface mounting: The mounting box, which was provided with the unit, has an entry hole in the bottom. The box is mounted with at least 2 screws, 3 mm ∅.
2. Flush mounting: The call point unit fits in a standard switch / socket box having standard 60 mm horizontal fixing centres.
3. Drag the cable through the mounting box cable entry.
4. Cut the cable suitable for the connection.
5. Peal the cable.
6. Peal the conductors so that there is no un-isolated conductor outside the terminals.
7. Connect the loop +, loop –conductors to the 2 terminals of the unit, marked common (loop -) and 470 ohms (loop +). The cable shield must be continued within the box.
8. Open the call point unit, using the testing tool. Use the reverse end of the tool, put this end in the middle of the unit bottom side (two holes). Push the tools towards the unit and bend. Now the cover of the call point can be removed. Remove the glass.
9. The call point is attached to the mounting box with 4 mm ∅ screws, which are provided. These fixing holes are on 60 mm distance, placed on both sides of the housing.

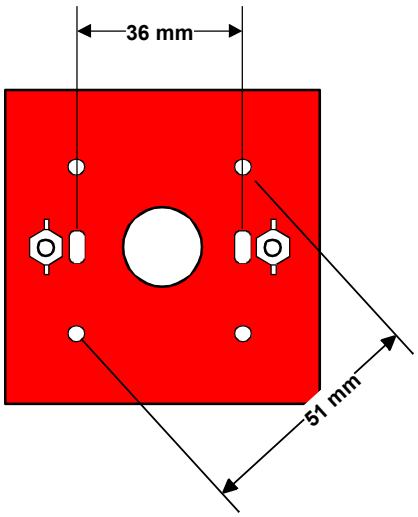

Picture 6-45

Testing:

To test the call point insert the supplied test key into the aperture at the bottom of the unit, the glass will drop and simulate operation of the call point. To reset remove the key.

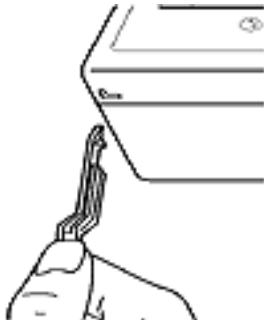

Picture 6-46

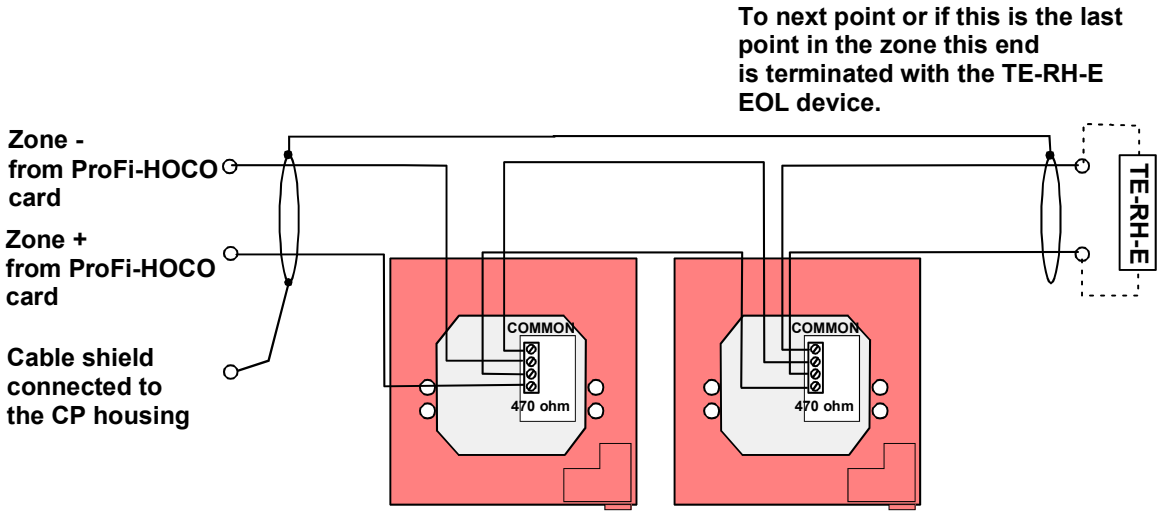

6.3.7. Manual call point, KAC/G/HE

This unit is for indoor use only.

KAC/G/HE from front:

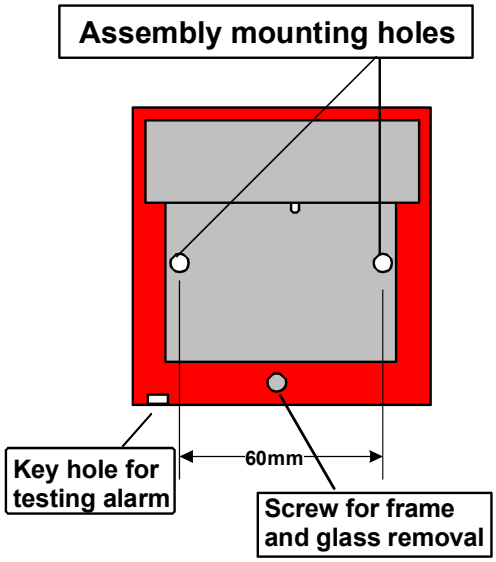

KAC/G/HE from rear:

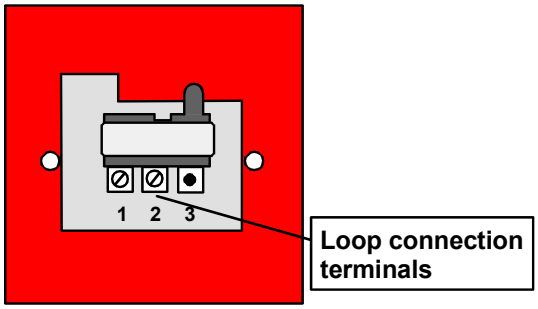

Picture 6-47

10. Surface mounting: The mounting box which was provided with the unit has a entry hole in the bottom. If the hole isn't suitable drill a new cable entry hole in the mounting box. For this use the tear off template (a part of the packing box). Drill suitable holes in the mounting surface. The box is mounted with at least 2 screws, 3mm ∅.

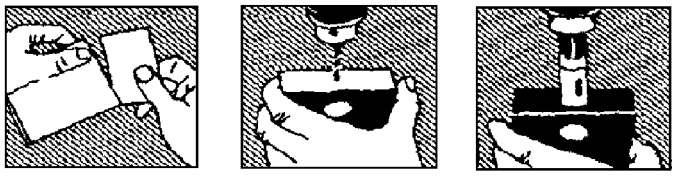

Flush mounting: The call point unit fits in a standard switch / socket box having standard 60mm horizontal fixing centres.

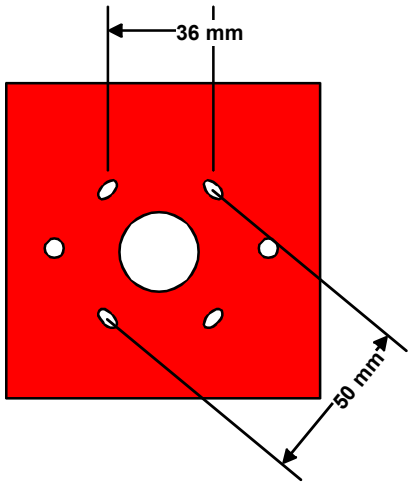

Picture 6-48

11. Drag the cable through the mounting box cable entry.
12. Cut the cable suitable for the connection.
13. Peal the cable.
14. Peal the conductors so that there is no unisolated conductor outside the terminals.
15. Connect the loop +, loop – and the shield conductors to the 3 terminals of the mounting box.
16. Connect the conductors of the call point to the loop terminals.
17. Open the call point unit by loosening the screw under the glass (in the middle). Grab the plastic frame from the bottom and lift it up, remove the glass.
18. The call point is attached to the mounting box with 4mm ∅ machine screws which are provided. These fixing holes are on 60mm distance, placed on both sides of the housing.
19. The GS-element isn't to be removed until the installation is finnished and the system is set up. The GS-element is replaced with a breakable glass.

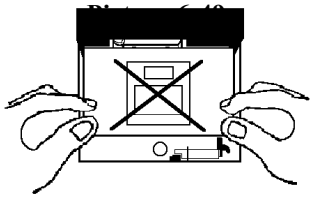

Testing:

To test the call point insert the supplied test key into the aperture at the bottom of the unit, the glass will drop and simulate operation of the call point. To reset remove the key.

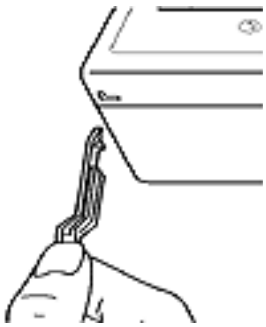

Picture 6-50

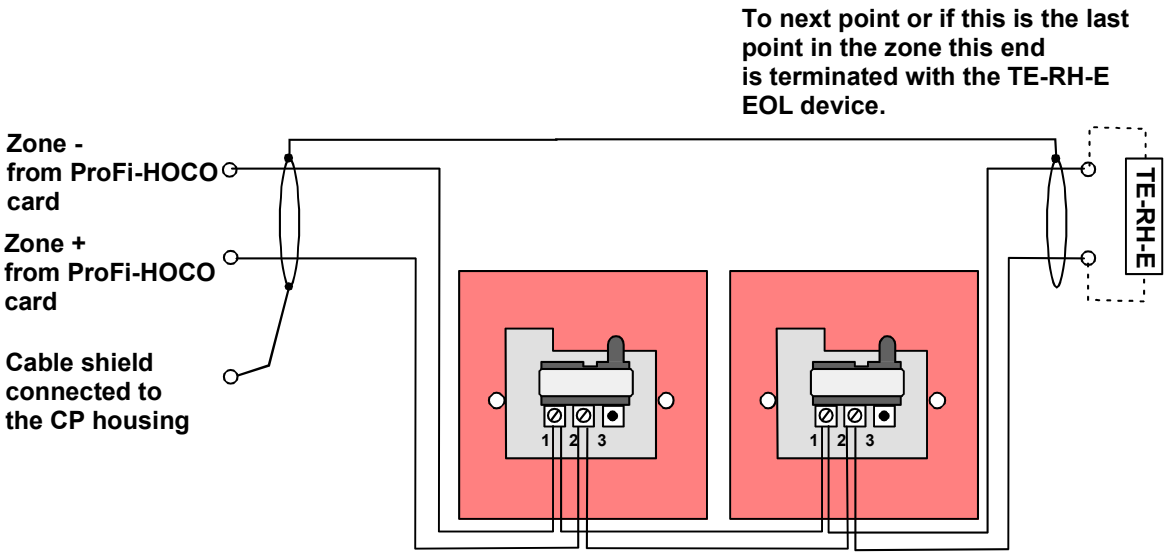

Picture 6-51

6.3.8. Optical beam detector, SPB-ET

See different manual.

6.3.9. Reflective beam detector, SRA-ET

See different manual.

Picture 6-52

6.3.10. Smoke sensor heater, RVE

Installation:

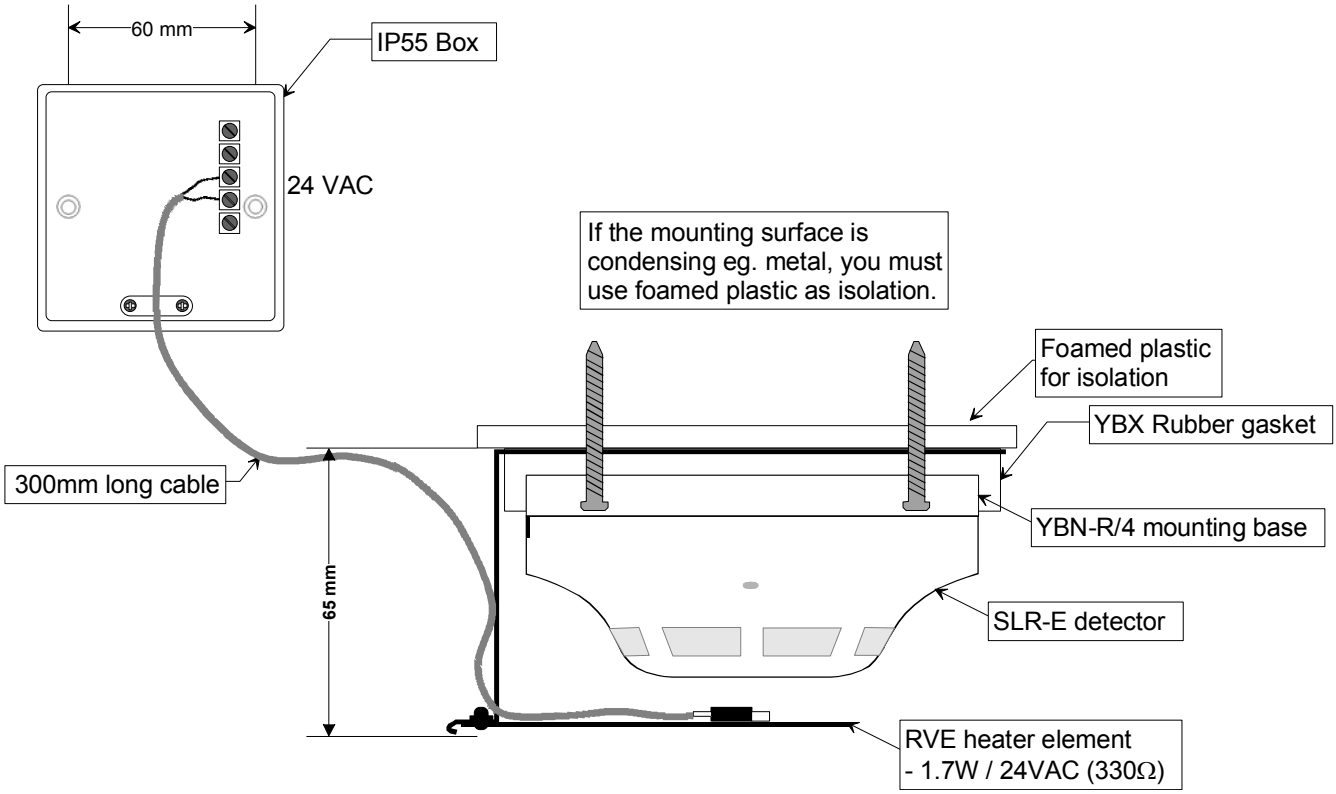

Picture 6-53

1. Drill 2 6mm holes (when using 6mm screw plugs), otherwise 3mm for the mounting base. The holes are drilled on a distance of 48 – 74 mm.
2. The two holes are to be drilled so that the cable lead-through is in the middle.
3. Mount the screw plugs into the drilled holes.
4. If the installation is made on a condensating surface you must use foamed plastic as isolation between the surface and the RVE-heater support.
5. The devices are mounted in order; (foamed plastic), RVE support, YBX-gasket, mounting base.
6. Drag the cable through the device cable entries. Punch a hole, trough the YBX-gasket.
7. Cut the cable suitable for the base.
8. Mount the devices with 2 screws, 3 mm ∅.
9. Peal the cable.
10. Connect the mounting base according to the instructions.
11. Drill 2 6mm holes (when using 6mm screw plugs), otherwise 3mm for the RVE connection box. The holes are drilled on a distance of 60 mm. **Note! The cable is 300mm long!**
12. Mount the screw plugs into the drilled holes.
13. Mount the connection box with 2 3mm screws.
14. Connect the 24VAC supply from the power transformer to the 24VAC terminals of the connection box.

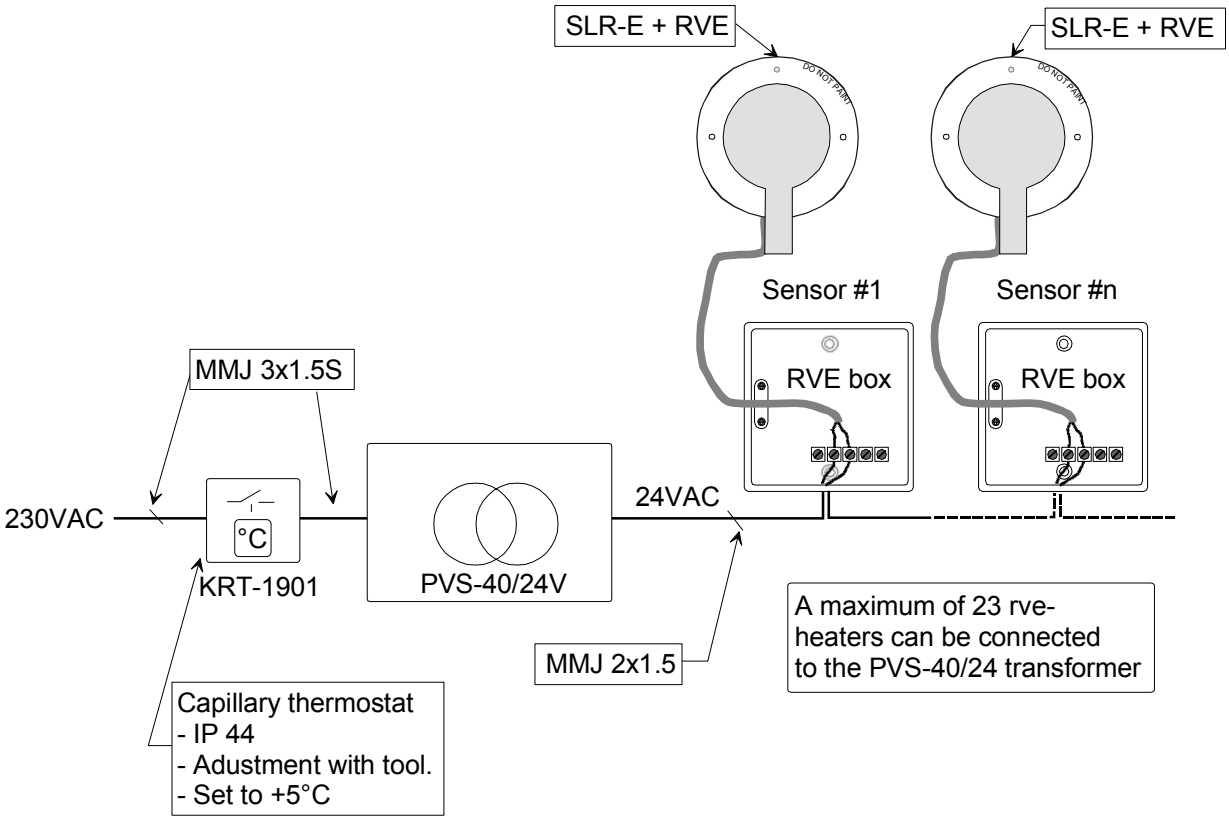
SLR-E + RVE
SLR-E + RVE
Sensor #1
Sensor #n
RVE box
RVE box
MMJ 3x1.5S
230VAC
°C
KRT-1901
PVS-40/24V
24VAC
MMJ 2x1.5
A maximum of 23 rve-heaters can be connected to the PVS-40/24 transformer
Capillary thermostat
- IP 44
- Adustment with tool.
- Set to +5°C

Picture 6-54

7. Loops and cables

7.1. General

All loop cables to the points must be of type KLMA, MMSA or MMPMA with metal shielding.

If there are devices which needs external power supply connected to the loop e.g. CHQ-Z (Zone module) or CHQ-B (Bell module) the power supply is connected with MHS type cable.

7.2. Measurement of loop cable isolations



The loops terminals + and - that are attached to the ProDex-loop cards must not in any circumstances be in any contact with the mains ground connection bar in the control panel housing nor in contact with the cable shield connection terminals.

The measurement must be done before connecting the loop to the loop card.

The measurement is made as explained and shown in chapter Procedures before power on

7.3. The analog loop

The following rules must be applied:

- The point count for each loop card must not exceed 127.
- If a short circuit on the loop occurs the lost sensor count may not exceed 32.
- Between at least every 32 sensors there must be a short circuit isolator.
- When the same loop is cabled to a different floor or a complete different building there must be a short circuit isolator at the last sensor of the floor or building.



The normal current consumption of the loop must not exceed 85 mA.
The maximum current consumption of the loop must not exceed 350 mA.



When an alarm occurs the system will light a maximum of 5 sensor leds. Only the 5 first alarmed sensors will have their leds on. The sensors after these won't have their leds lighted.

7.3.1. Loop cabling



The maximum allowed cable resistance for a point on the loop, measured from the loop card must not in any case exceed 74Ω. The point on the loop must be considered in the worst possible way, a short circuit has occurred (the point is powered from the unfavourable side of the loop).
If the loop has branches from it you must add the worst-case loop cable resistance for the points in the branch to the resistance of the branch. This value must not exceed 74Ω.

The maximum allowed cable capacitance for the loop is 0,7µF.

When the cabling of the loop is planned the best way of doing this is to try to place the points on the loop so that the cabling can be considered as points on equal distance. This is more favourable then if they where at the end of the loop. Also if you plan branches on the loop try to make these branches less then 100m long. If the branches are less then 100m long they can be unconsidered. If the branches are longer then 100m their resistance must be measured by hand, thus making the job harder for the installer.

The control panel measures the loop resistance it self, so this is a useful aid. It also saves money and mounting time (The loop resistance doesn't have to be measured by hand). The control panel can only measure the loop resistance between the loop drive and the loop return, thus not being able to measure the accurate resistance if there are branches within the cabling. That's why the branches must be less then 100m long, thus with so little influence on the resistance.

The resistance of the loop can't be measured by hand if there are short circuit isolators on the loop. If the loop must be measured by hand you can only measure the resistance to a short circuit isolator, short circuiting the loop conductors to the isolator. This means you have to measure the loop resistance in small parts (parts between 2 short circuit isolators).



The control panel gives the accurate loop resistance from loop drive to loop return. The control panel can't detect branches and determine their resistance.

Use branches less then 100m long, thus you can leave them unconsidered when calculating the resistance from the loop drive or return to the last point of the branch. And only consider the resistance given by the control panel.

When using branches longer then 100m they have to be measured by hand and calculated into the loop resistance value given by the control panel.

Try to cable the system so that you can calculate the cable conductor pairs as if the points where placed on equal distance on the loop. This way you get the job done with less cable conductors, hence cheaper.

If you are cabling a loop to another building, and the distance to the building is more then 100m you have to consider the points on the loop as if they where placed at the end of the loop. If the distance to the building is less then 100m you can consider the points on the loop as if they where placed on equal distance.



A cable break is detected if the loop cable resistance is > 165Ω ±10%.

Different loop setups

A normal loop with 2 branches. The points on the loop are considered as being placed on equal distance. The loop cable conductor calculation can be made with the ”points are placed on equal distance” graph.

This loop is normally used within a building. The branches may lead to a small building near by.

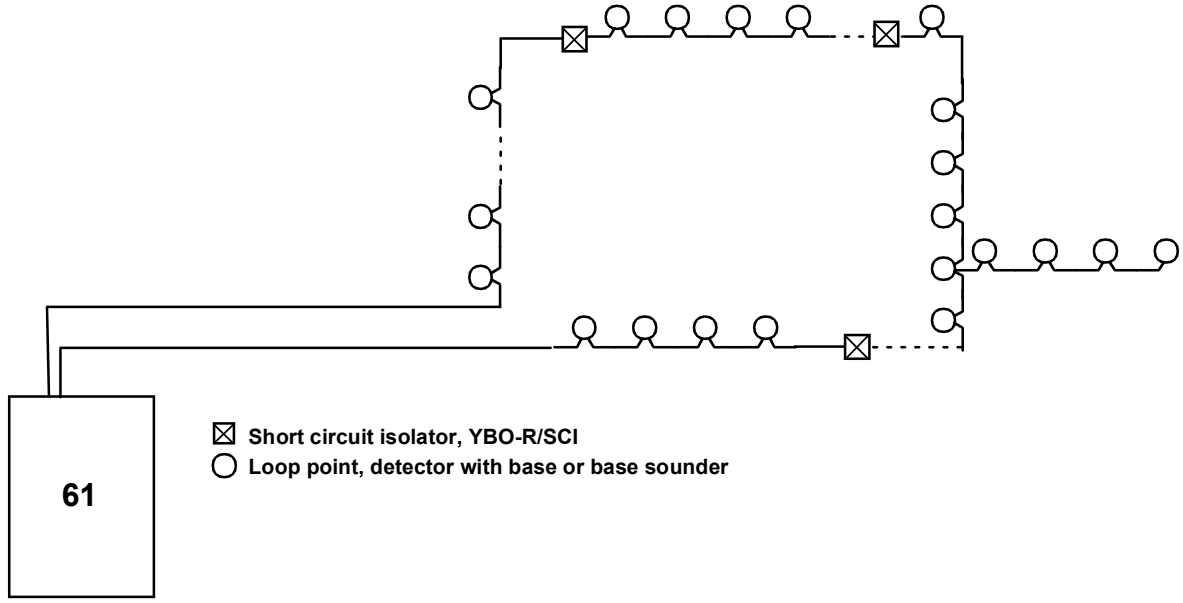

Picture 7-1

A loop that leads to another building where, the sensor count is more then 32. The distance to the building is more then 100m. The points on the loop have to be considered as if they where placed at the end of the loop.

When the distance to the building is more then 100m the loop cable conductor calculation must be made with the ”points are placed at the end of the loop” graph. If the distance to the building is less then 100m you can consider the points on the loop as if they where placed on equal distance, thus using the ”points are placed on equal distance” graph.

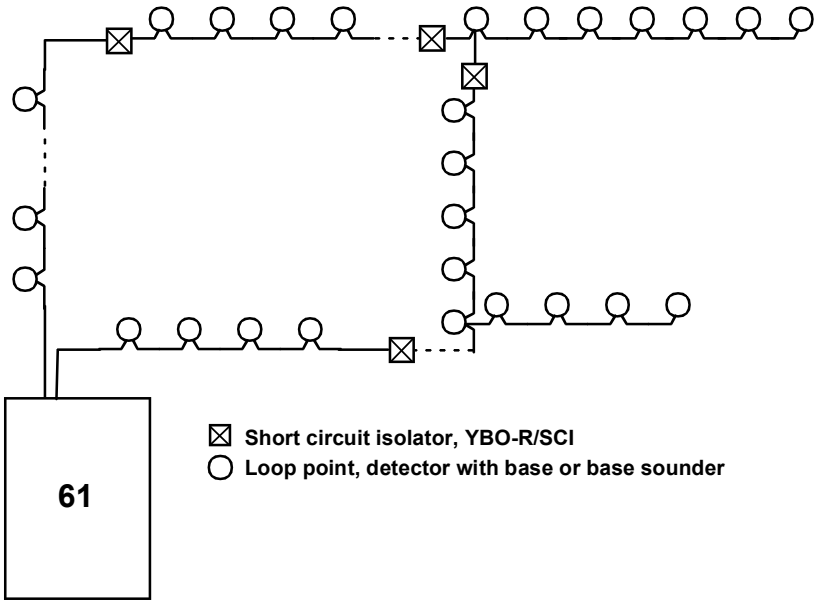

Picture 7-2

A loop can also be only a branch, an open loop. In this case the points on the open loop must be less then 32. If the points are placed on the whole branch length or if this branch goes to a another building and the distance to this building is less then 100m you can consider the points on the loop as if they where placed on equal distance, thus using the ”points are placed on equal distance” graph. Otherwise the points on the open loop have to be considered as if they where placed at the end of the loop.

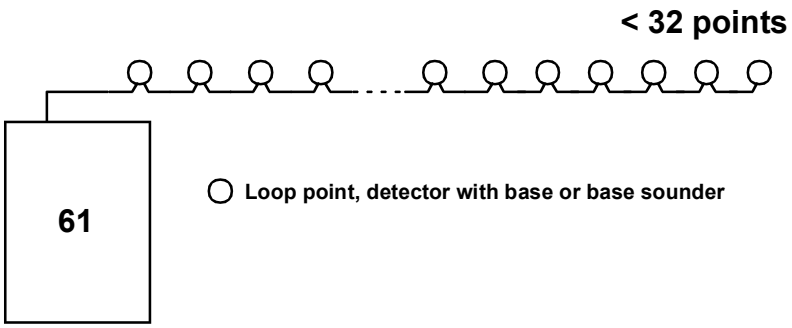

Picture 7-3

7.3.2. Loop resistance

The resistance for the loop and for a branch measured from the unfavourable side of the loop (the most distant path) must not exceed 74Ω.

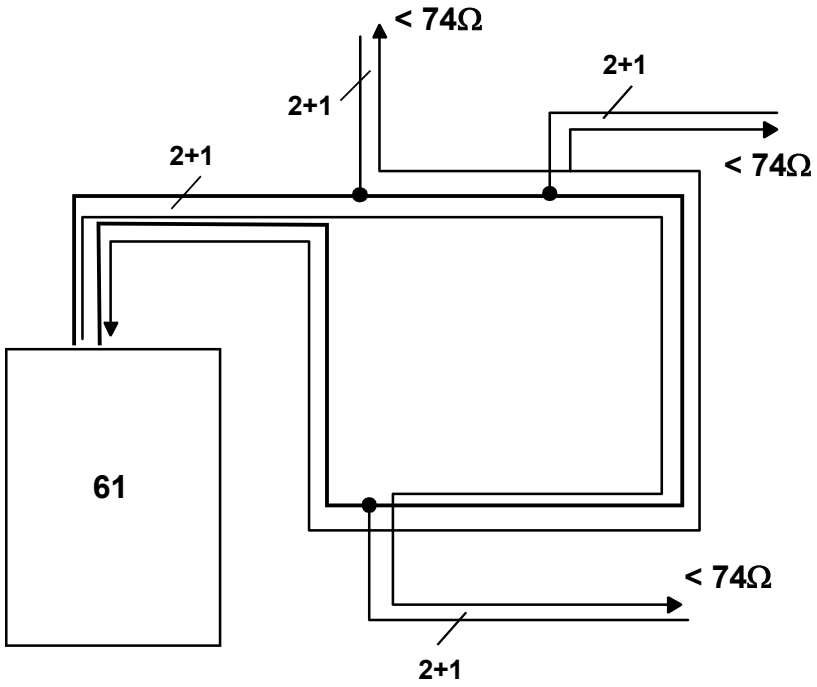

Picture 7-4

Measurement by the Control panel

The control panel measures the loop resistance, which is reported to the ProDex-installation program, which runs on a PC. The resistance can also be viewed from the user panel -> loop display.

The resistance measured by the control panel is only the loop resistance. If the loop has branches from it these branches cannot be measured with the control panel. This is why we recommend that the branches are less then 100m long thus you can leave them unconsidered (the resistance of the branch is so small compared to the rest of the loop). When the cabling is done like this you don't need to measure the resistance by hand.

The biggest value, which can be allowed measured from the control panel, is 150Ω. This resistance is possible only with the following example.

Although as this example shows the control panel is pleased when the loop resistance is less then 150Ω, the rule that the resistance to any point on the loop measured from the unfavourable side of the loop must never exceed 74Ω must always be applied.

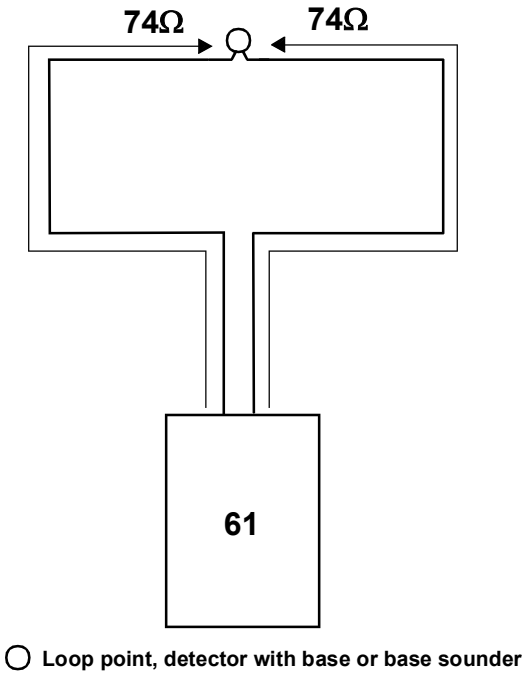

Picture 7-5

Plan your cabling good and be able to save time and money, not having to measure resistance by hand and not using more conductor pairs then actually needed.

If you have branches from the loop, which are longer, then 100m you always have to measure the branch separately.

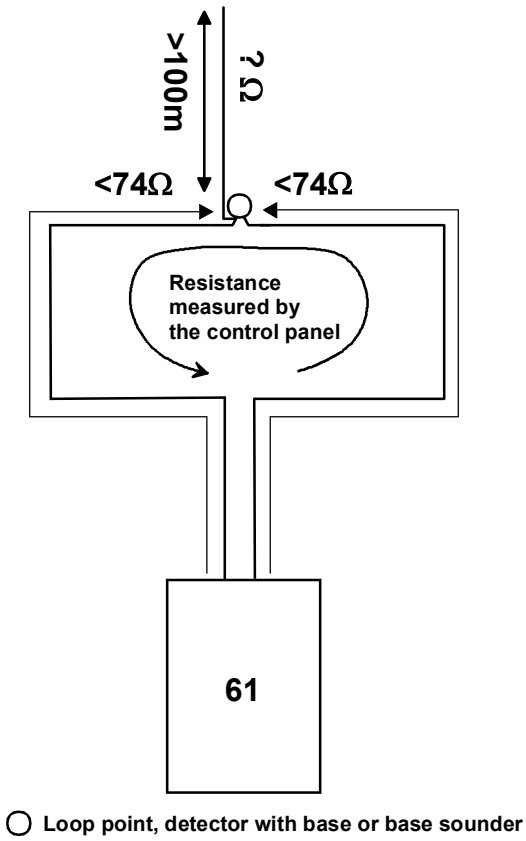

Picture 7-6

This value must be considered together with the value given by the control panel, however these 2 values are not added directly. The value given by the control panel is for the whole loop (from drive to return), but if the branch is connected at the middle of the loop the resistance given by the control panel can be divided by 2. **Half of the loop resistance value is the smallest value, which must be added to the branch resistance value.** If the branch is connected at a distance less then 100m from the control panel the whole resistance of the loop must be added to the branch value.

The branch is connected at the middle of the loop, measure the branch resistance by hand. Half of the loop resistance value given by the control panel must be added to the branch resistance value. This sum must be less then 74Ω.

The only way to get an accurate value of the resistance to the last point on an ending branch is to measure the loop resistance to this branch from both sides.

How the measurement is done by hand is explained in Measurement by hand.

Measurement by hand

This kind of measurement must only be done if the loop has a branch from it and the branch is longer then 100m. As long as the sum of the total loop resistance which is given by the control panel and the resistance of the separate branch (measured by hand) is less then 74Ω you don't have to measure the loop by hand.

If you have to measure the loop or some parts of the loop e.g. a branch the following must be considered

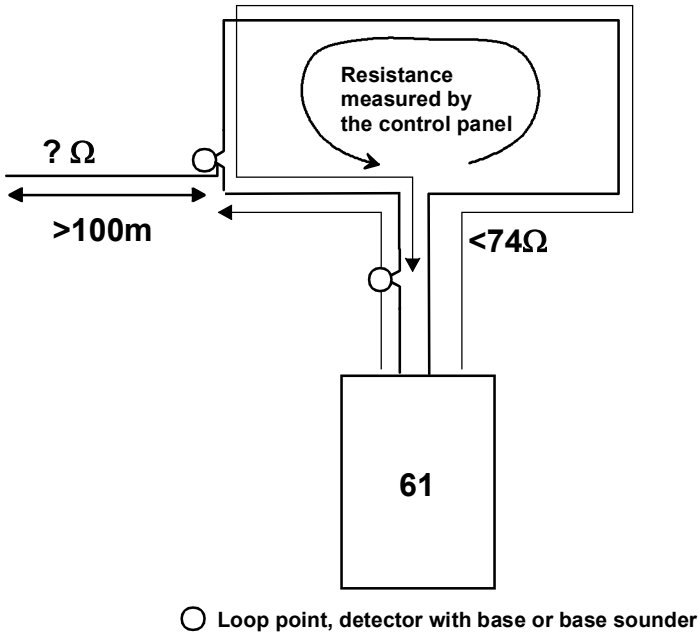

Picture 7-7

- All short circuit isolators that are between the 2 points that are being measured must be eliminated. The elimination of these is made by connecting the connection terminals 1 and 2 (LOOP IN/OUT +) together.
- The detectors on the loop don't have to be removed for the measurement.

Measuring a branch:

- Disconnect the branch from the rest of the loop.
- The last point on the branch must be short circuit. This is made by connecting the loop + and - terminals at the last base together.
- Attach the opened branch terminals to your resistance meter, + pole to the LOOP + conductor, - pole to the LOOP – conductor.
- Get the reading of the meter.

Measuring the loop resistance to the point where the branch begins:

- This measurement must be made from both sides (loop drive and loop return).
- Short-circuit the loop at the terminals where the branch begins.
- Remove the loop connector from the ProDex-HOAN loop card.
- Attach the connector terminals 1 and 2 to your resistance meter, + pole to the terminal 1 (loop drive +), - pole to the terminal 2 (loop drive -).
- Get the reading of the meter.
- This is the resistance value measured from the loop drive side.
- Now attach the connector terminals 3 and 4 to your resistance meter, + pole to the terminal 3 (loop return +), - pole to the terminal 4 (loop return -).
- Get the reading of the meter.
- This is the resistance value measured from the loop return side.
- Choose the higher value of these measurements.

The total resistance value to the last point on the branch is the sum of the higher loop resistance value and the branch resistance value.

E.g. you want to measure the resistance value when the branch is powered from the unfavourable side of the loop (the most distant path).

Follow the instructions for measuring the loop and the branch. See **Error! Reference source not found.** and **Error! Reference source not found.** where the measurement is illustrated.

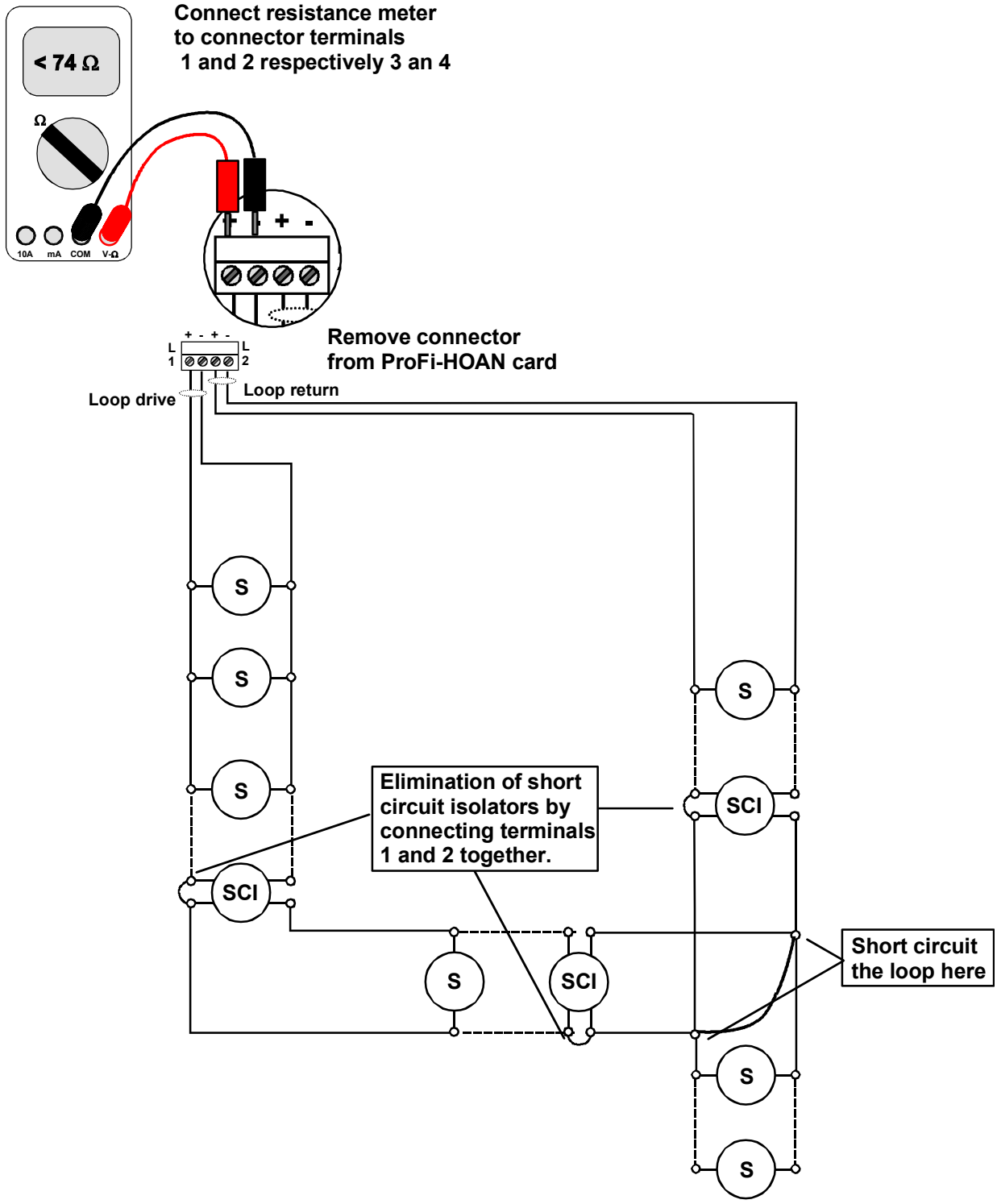
Connect resistance meter
to connector terminals
1 and 2 respectively 3 an 4
< 74 Ω
10A
mA
COM
V-Ω
Remove connector
from ProFi-HOAN card
L 1
L 2
Loop drive
Loop return
S
S
S
SCI
Elimination of short
circuit isolators by
connecting terminals
1 and 2 together.
S
SCI
S
SCI
S
S
Short circuit
the loop here

Picture 7-8

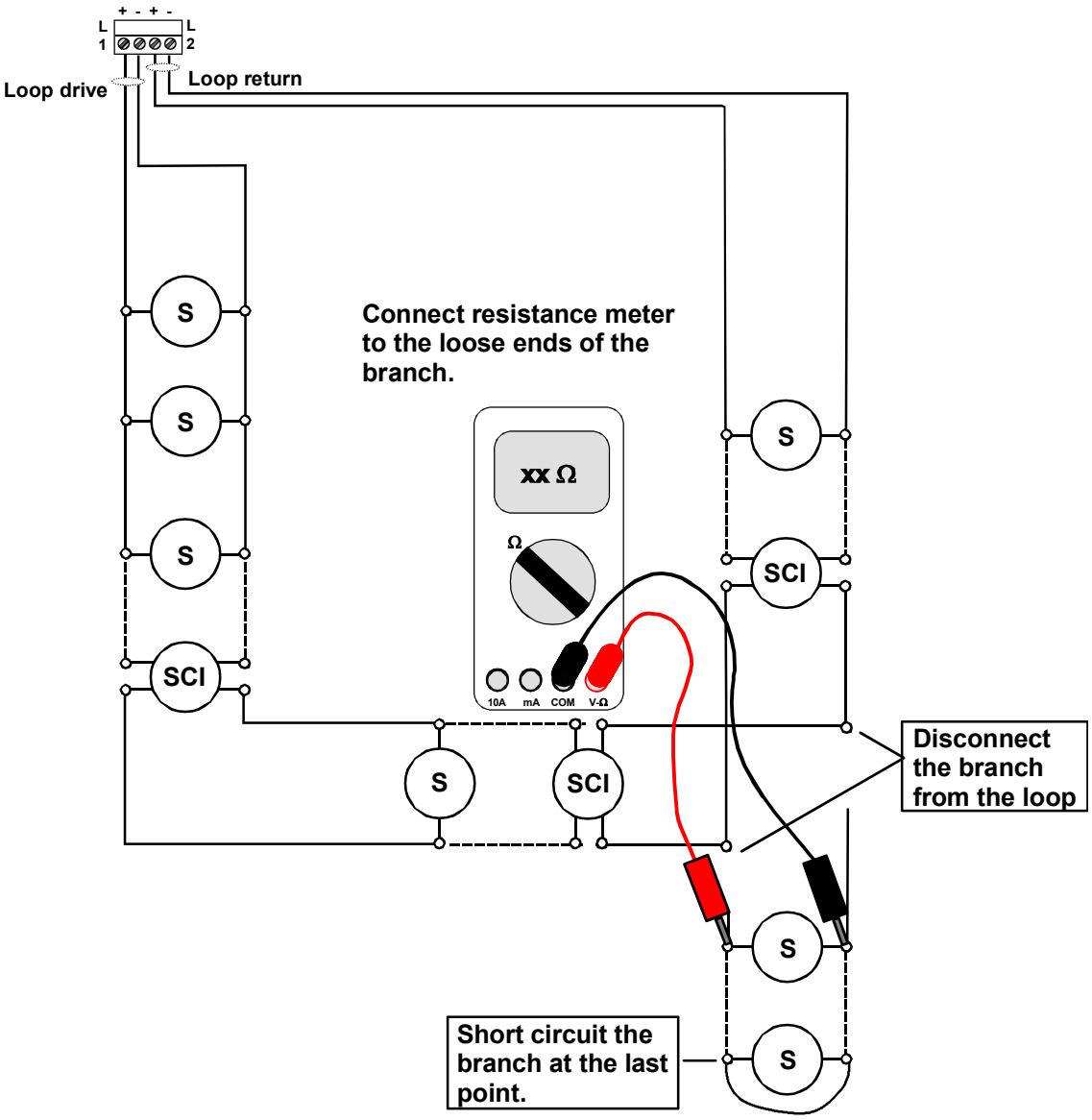
+ - + -
L 1
L 2
Loop drive
Loop return
S
S
S
SCI
Connect resistance meter to the loose ends of the branch.
xx Ω
Ω
10A
mA
COM
V-Ω
S
SCI
S
SCI
Disconnect the branch from the loop
S
Short circuit the branch at the last point.
S

Picture 7-9

7.3.3. Signalling in fail state

The following examples will explain the situation for the loop in fail situations.

If a short circuit occurs on the loop all points between 2 short circuit isolators will be lost. If the short circuit occurs on an ending branch all points between the nearest short circuit isolator and the branch end will be lost.

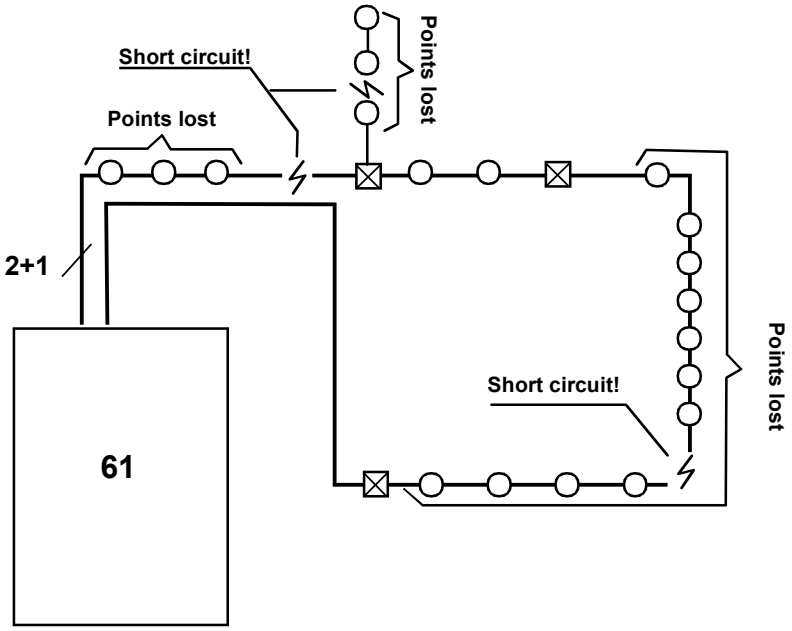

☒ Short circuit isolator, YBO-R/SCI
○ Loop point, detector with base or base sounder

Picture 7-10

If a cable brake occurs the signalling to the points is illustrated in the following pictures. If a cable brake occurs on the loop, no points on the loop are lost.

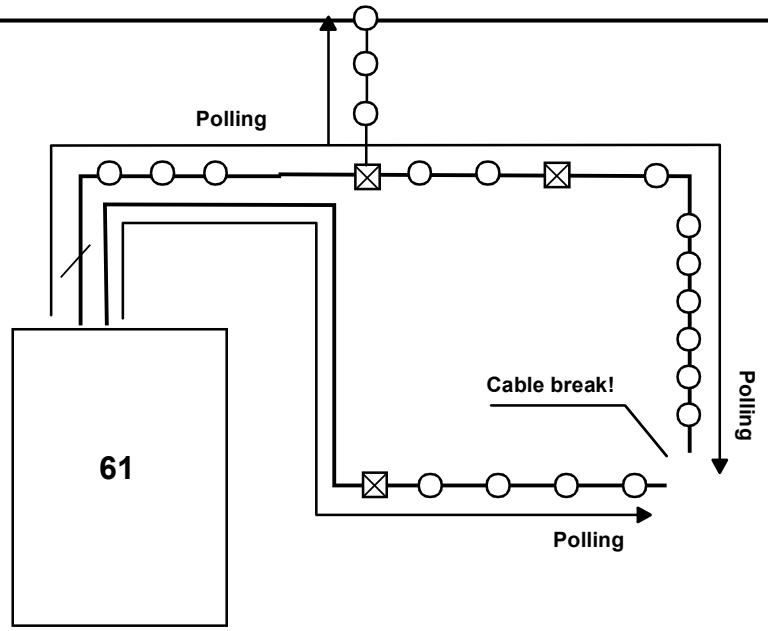

☒ Short circuit isolator, YBO-R/SCI
○ Loop point, detector with base or base sounder

Picture 7-11

If a cable break occurs in a branch, the points on this branch that are placed after this break will be lost.

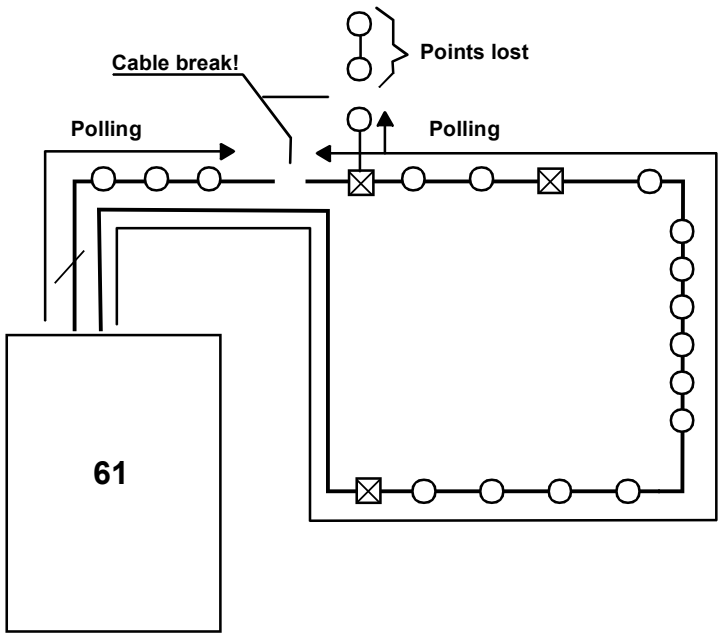

☒ Short circuit isolator, YBO-R/SCI
○ Loop point, detector with base or base sounder

Picture 7-12

7.3.4. The ProFi-HOAN loop card

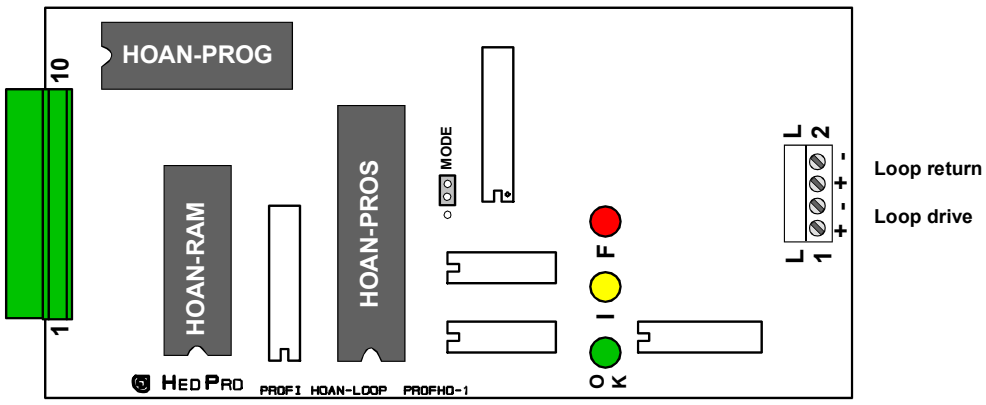

Picture 7-13

With the ProDex-HOAN loop card you can connect up to 127 analog HOCHIKI-sensors (with the bases YBN-R/3, YBO-R/SCI or CHQ-BS) to the control panel.
If a CHQ-BS is used as a separate unit without a sensor it reserves one address.

You can also connect a CHQ-Z (Conventional zone module), a CHQ-MZ (Conventional mini zone module), a CHQ-R (Output module), CHQ-S (Switch module), CHQ-SIO (Single IO module) and a CHQ-B (Bell module). Adding one of these modules reserves an address from the loop.

The card includes its own processing with both RAM and ROM memory.

The card is plugged to the control panel terminal bodies (LOOP1 – LOOP4). The card is mounted with 2 (3x20) screws to the control panel housing.

Each Loop corresponds to:

- LOOP1, sensors 1 – 127.
- LOOP2, sensors 128 – 254.
- LOOP3, sensors 254 – 381.
- LOOP4, sensors 381 – 508.

The loop consists of the drive and the return. The loop cable pairs starts from the loop drive (+, -) and the cable pairs end at loop return (+, -).

The card has 3 leds, which have the following purpose:

	System fault, processor reset (Program not running)	Offline	Point initialisation in progress. (Type checking, calibrating etc).	Loop contains faulty point(s). E.g. double address, missing.	Loop fault (e.g. short circuit, open circuit)	Normal state, OK
G (Green)	-	BLINK 0.5 Hz	Blinks along with communication	Blinks along with communication	Blinks along with communication	Blinks along with communication
Y (Yellow)	-		ON	BLINK 0.5 Hz	-	-
R (Red)	ON	ON	-	-	BLINK 0.5 Hz	-

Technical data:

	prodex-HOAN
Feature	
Points:	
Maximum without using short circuit isolators	32
Maximum when using isolators	127
Current consumption from mother board [mA]:	
Minimum (only card)	40
Maximum, (alarm state) (AC off, depends on loop devices) device consumption x2	700
Loop output voltage [V]:	
Low minimum	29
Low maximum	31
High minimum	37
High maximum	39
Loop current consumption [mA]:	
Maximum (normal state)	85
Maximum (alarm state)	350
Loop maximum resistance [Ω] (to any point on the loop)	74
Loop maximum capacitance [µF]	0,7
Size [l x w x h] [mm]:	145x67x15

Picture 7-14

In the following pictures we have tried to give some examples how the loop can be configured in the system.

The first picture is an example of a simple loop where the sensor count doesn't exceed 32.

In this example we don't have to use any short circuit isolators because its allowed to loose a maximum of 32 sensors if a short circuit occurs on the loop.

The loop drive + (positive) and – (negative) is connected to the respective pole of the first sensor mounting base. These are then rerouted to the next mounting base on the loop. From the last mounting base the loop is then connected to the loop return poles of the HOAN-loop card.

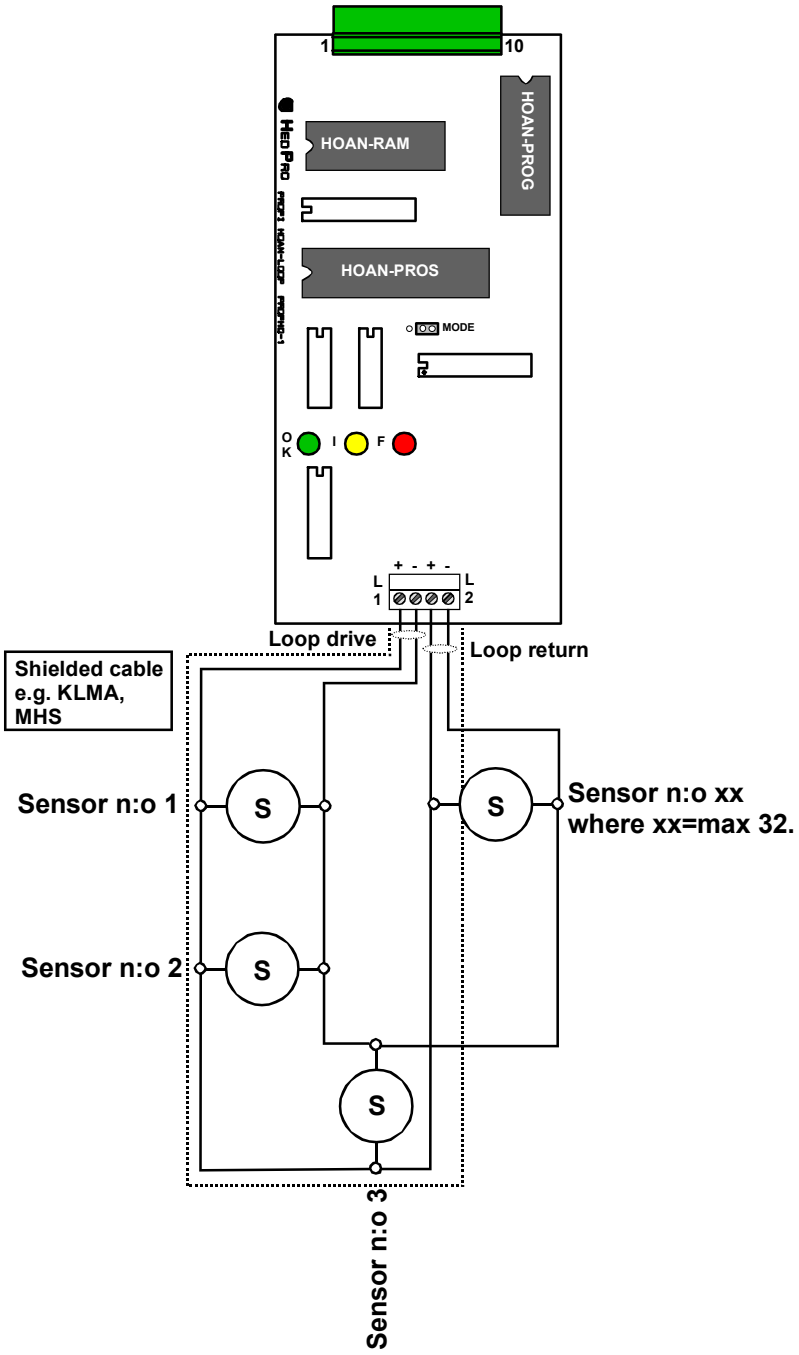

Picture 7-15

The second picture is an example of a loop where the sensor maximum sensor count / loop card is achieved (127).

In this example the use of short circuit isolators is a must. Here we have used a short circuit isolator mounting bases on every 33 sensor, thus not loosing more then 32 sensors if a short circuit occurs (the sensor with the short circuit isolator is powered from the other side of the loop).

The loop drive + (positive) and – (negative) is connected to the respective pole of the first sensor mounting base. These are then rerouted to the next mounting base on the loop. From the last mounting base the loop is then connected to the loop return poles of the HOAN-loop card.

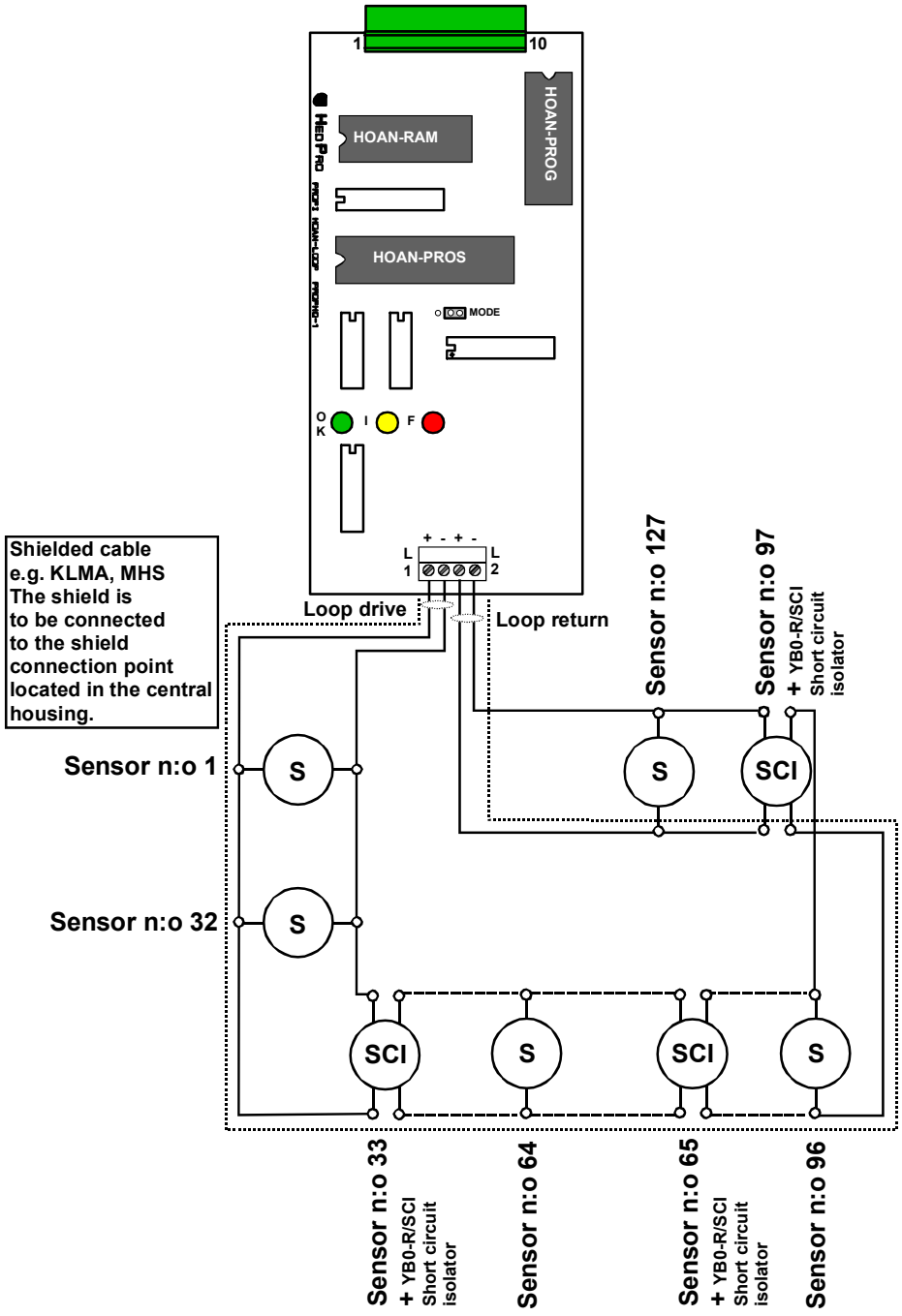

Picture 7-16

The third picture is an example of a loop where the sensor maximum sensor count / loop card is achieved (127) and we have used branches.

In this example the use of short circuit isolators is a must. Here we have used a short circuit isolator mounting bases on the begin of every branch and when the loop exits the floor or building (according to the EN54). Here you must apply the rule of not loosing more then 32 sensors if a shortcut occurs (the sensor with the short circuit isolator is powered from the other side of the loop).

The loop drive + (positive) and – (negative) is connected to the respective pole of the first sensor mounting base. From this point the loop is extended to different branches. The sensor count in an ending branch must not exceed 32. From the loops last branching point it's then connected to the loop return poles of the HOAN-loop card.

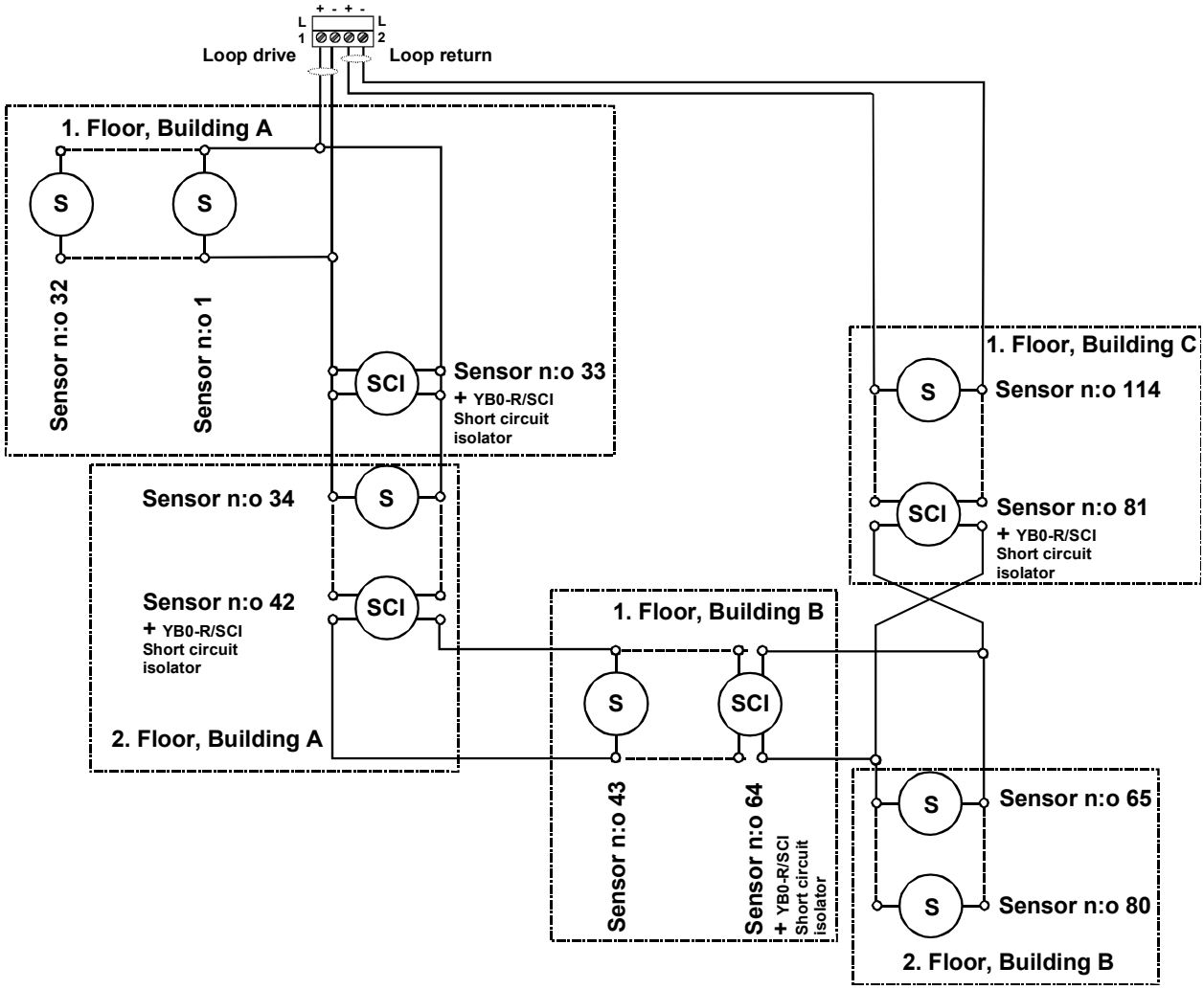

Picture 7-17

7.4. The conventional line

7.4.1. General

To the conventional line (zone) you can connect a maximum of 32 points. The cabling is always made as one branch, which has an EOL (End Of Line) device at the last point on the branch.

If the conventional zone includes call points, they must be connected at the begin of the zone. This because the mounting bases doesn't support line continuity (if a sensor is removed from the zone all points after this point are lost too).



The control panel only detects alarms from a conventional zone; it doesn't detect which sensor on the zone alarms.

Any short circuit or cable break on a conventional zone will cause a fault.

A maximum of 4 sensors in alarm state is detected as a alarm. If the alarm count exceeds 4 sensors in the same line, the line will go into fault state.

7.4.2. Line cabling



The maximum allowed cable resistance for the loop must not exceed 74Ω.

The maximum allowed cable capacitance for the loop is 0,7µF.

7.4.3. Conventional sensors in an analog loop

Conventional sensors can be connected to the system from the analog loop.

By connecting one of the following devices to the analog loop we can use conventional points:

- Mini zone module CHQ-MZ, you can connect up to 6 conventional sensors.
- Conventional loops controller CHQ-Z, you can connect 2 conventional zones. You are not allowed to connect more then 32 sensors to the CHQ-Z (including both zones).

Both devices reserves only one address from the analog loop.

The maximum zone resistance and the capacitance are set by the CHQ-MZ and the CHQ-Z modules, see chapter Mini zone module, CHQ-MZ and Zone.

7.4.4. The ProFi HOCO-line card

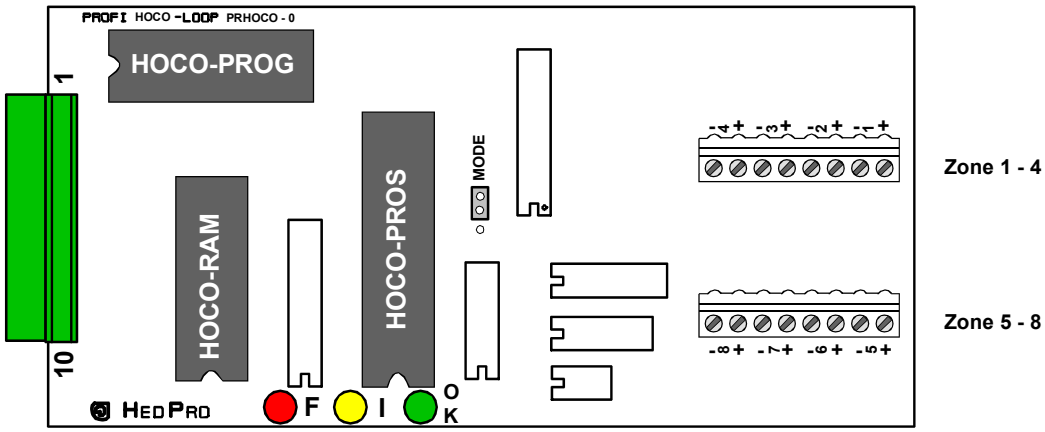

Picture 7-18

With the ProDex-HOCO line card you can connect 8 zones (32 sensors / zone) to the control panel. You can maximally attach 4 ProDex HOCO line cards to the control panel, although 508 points is the maximum point count to the control panel.

The card has 3 leds, which have the following purpose:

	Program not running (system fault)	Line fault (short)	Line fault (open)	Normal state, OK	Line state confirmation
G (Green)	-	Any Blink	Any Blink	BLINK every 2s	CONF BLINK
Y (Yellow)	-		BLINK 0.5 Hz	-	-
R (Red)	ON	BLINK 0.5 Hz		-	-

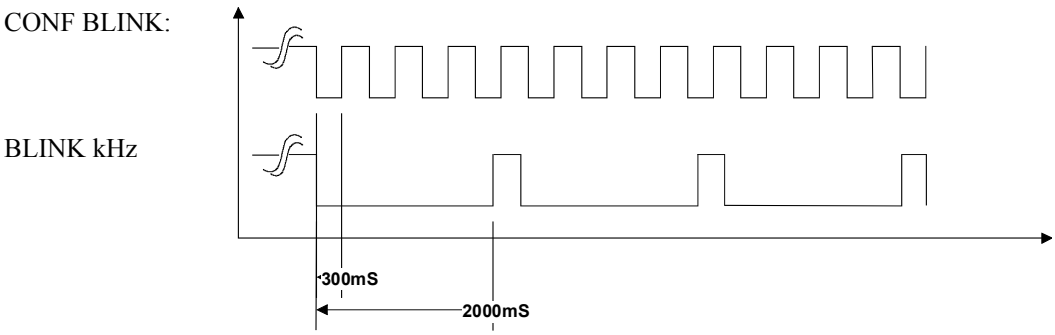

Picture 7-19

The ProDex-HOCO can detect up to 5 separate alarms on a zone. More then 5 points in alarm state will cause a failure on the zone.

Technical data:

	prodex-HOCO
Feature	
Lines	8
Points:	
Maximum to 1 line	32
Maximum point count (8 lines)	256
End of Line device (EOL)	zener diode 24V/1.3W
Current consumption from mother board [mA]:	
Minimum (only card)	40
Maximum (4 Alarms on all 8 lines)	700
Loop output voltage [V]:	
Minimum	20
Maximum	30
Line current consumption [mA / Ω]:	
Normal state:	
Minimum	0 / infinite
Maximum	1,6 / 16k
Alarm state:	
Minimum	26 / 610
Maximum	80 / 100
Line maximum resistance [Ω]	74
Loop maximum capacitance [µF]	0,7
Size [l x w x h] [mm]:	145x67x15

Picture 7-20

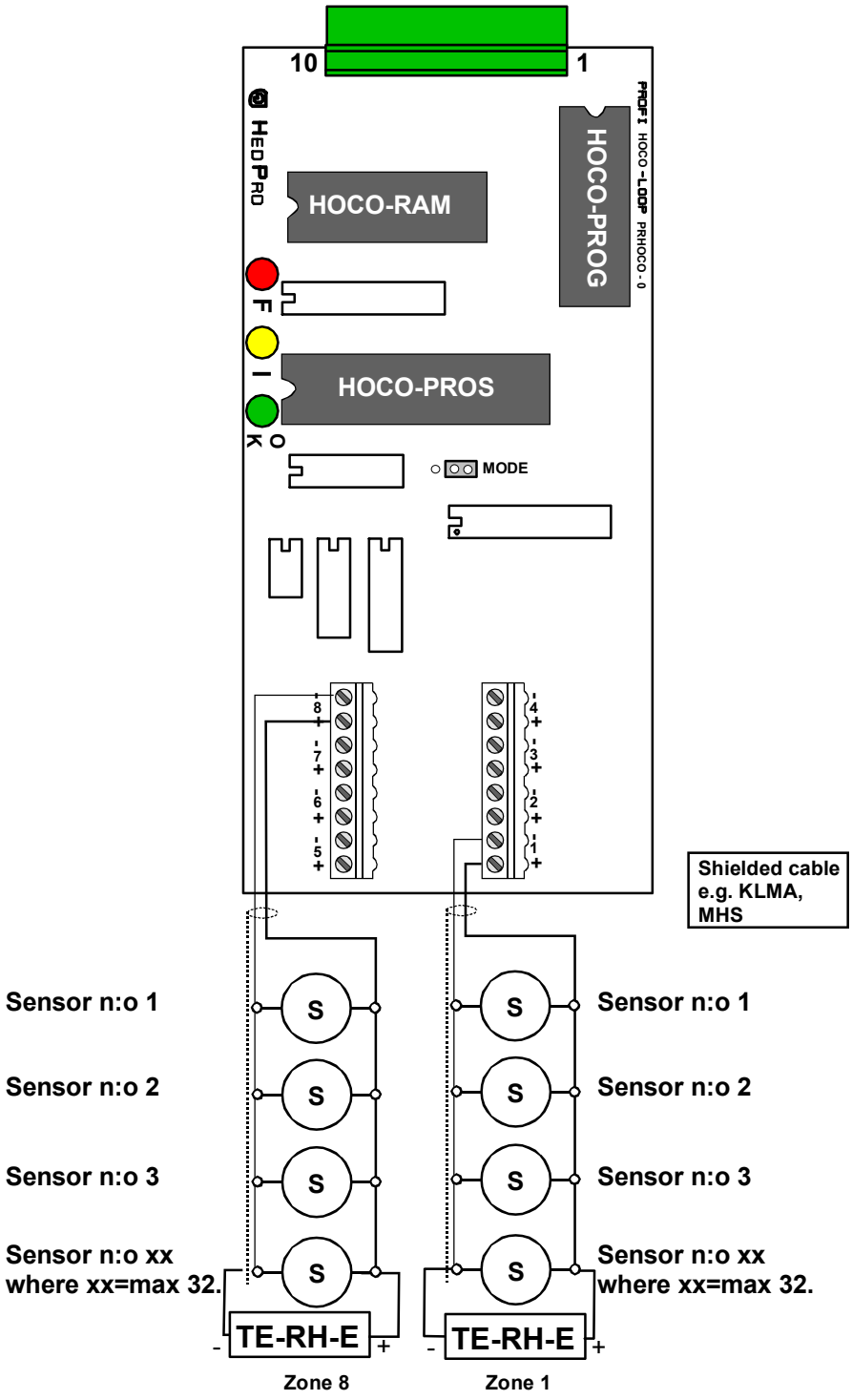
10
1
HEDPRO
HOCO-RAM
HOCO-PROG
PROFI HOCO-LOOP PRHOCO-0
F
I
O
K
HOCO-PROS
MODE
8
7
6
5
4
3
2
1
Shielded cable
e.g. KLMA,
MHS
Sensor n:o 1
Sensor n:o 2
Sensor n:o 3
Sensor n:o xx
where xx=max 32.
S
TE-RH-E
Zone 8
Zone 1

Picture 7-22

8. The Control panel

8.1. Installation steps

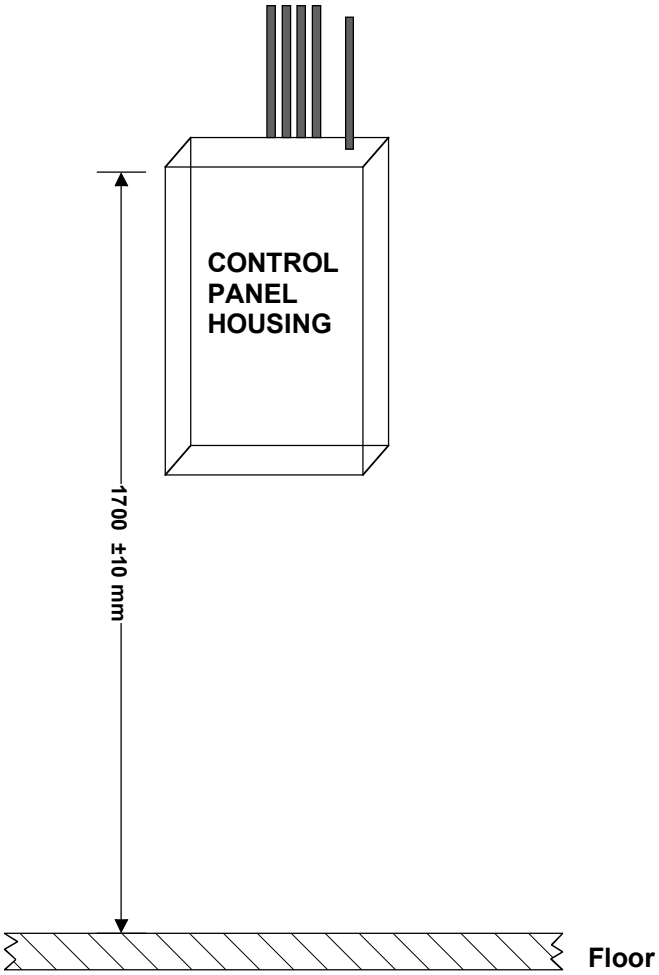

Picture 8-1

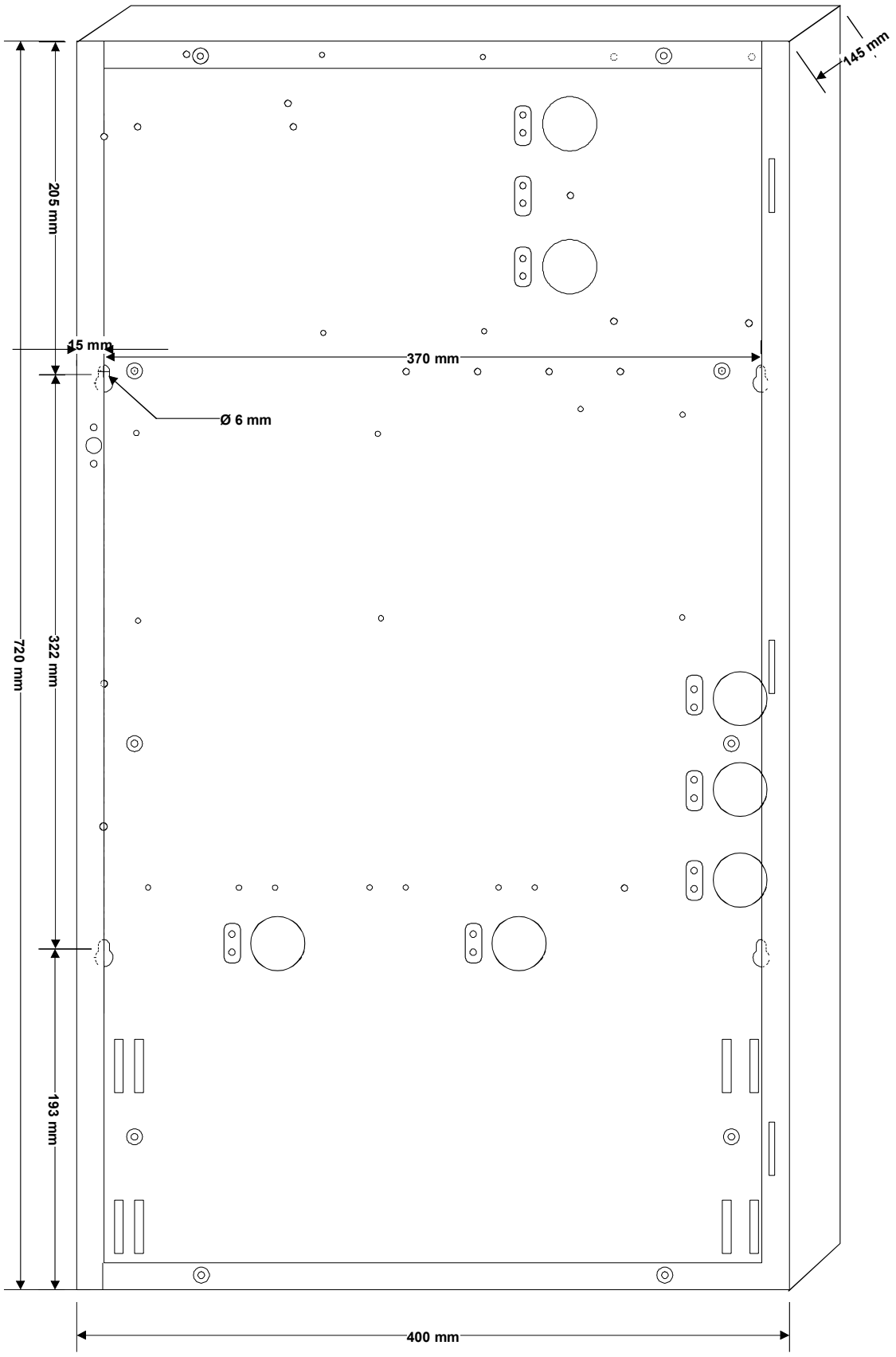

Picture 8-2

The installation height measured from the floor to the upper level of the housing is 1700 mm ± 10 mm. The height is given only because the connection of the cables is easy when the control panel is attached at this height.

The control panel housing is made so that the cables can run between the housing and the wall.

The control panel unit weights 20 kg including 2 x 12V/17 Ah Batteries. Only the bolts, which are included with the Control panel, are allowed to use to attach the housing to the wall. The wall must also be of a material, which can carry the weight of the control panel.

1. Drill 4 10-mm2 holes for the picking anchors. See picture for detailed positions for the holes.
2. Hammer the picking anchors into the holes.
3. Lift the housing up on the wall and mount it with 4 6-mm^2 bolts.
4. Cut all cables suitable for the installation.
5. Drag the cables to the entry holes in the housing. Note that the lower entry holes are for the loop cables and the upper entry holes are for user panels, sirens, telephone lines etc. You can use a draw spring to drag the cables between the wall and the housing.
6. Peal the cables suitable. Note that the shield of all cables must be as short as possible. The shield is connected to the shield connection beside the entry hole.

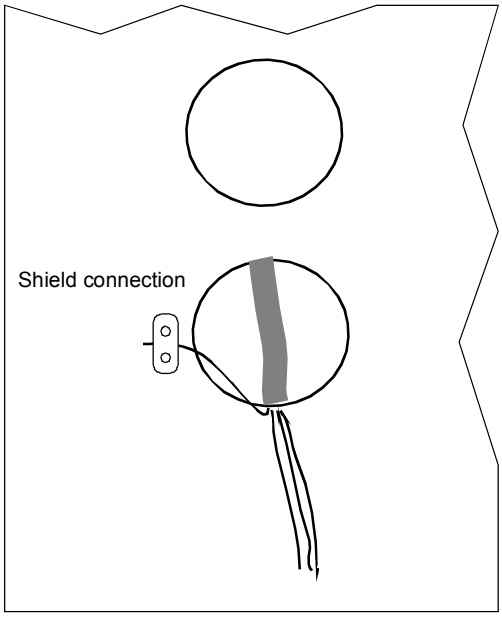

Picture 8-3

7. **Don’t connect any signal cord to any terminal at this stage!**
8. The power to the transformer is taken from an own power group with 10A fuse. The cable type is MMJ 3x1.5S. The ground conductor (yellow/green) isn’t connected in the transformer. This conductor has to bee isolated from the others. **Don’t connect the mains power!**
9. An own 6-mm^2 conductor (green/yellow) is cabled from the power central ground terminal to the control panel. This conductor is connected to the shield connection.
10. The housing fits 2 x 12V/17 Ah batteries, which are placed under the loop cards. The batteries are tightened with 2 strips, which are delivered with the housing. See . The battery poles are positioned towards the cover of the control panel.
11. **Don’t connect the battery plug to the motherboard! If it’s plugged unplug it.**
12. The red battery cable from the motherboard plug 24V BATT is connected to the plus pole of the right hand side battery. The black cable from the motherboard is connected to

the left hand side batteries minus pole. The 2 leftover poles in the middle are connected to each other with the short cable provided with the control panel.



When all these connections have been made you must follow the procedure in chapter.

After this check you are allowed to connect the signal cords to the terminals. When this is done you are allowed to connect mains power on and plug the battery to the motherboard.

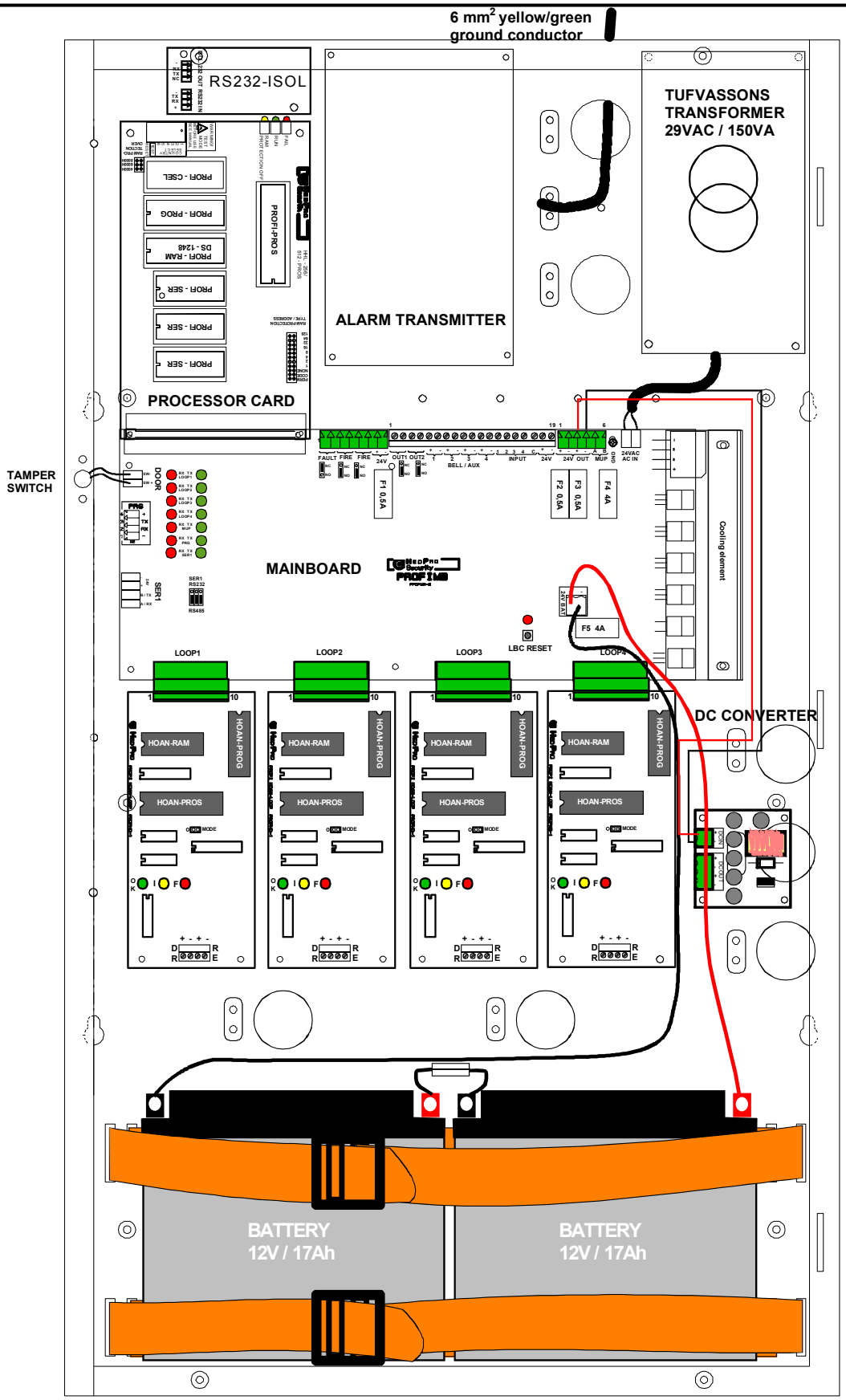
6 mm² yellow/green
ground conductor
RS232-ISOL
TUFVASSONS
TRANSFORMER
29VAC / 150VA
ALARM TRANSMITTER
PROCESSOR CARD
TAMPER
SWITCH
MAINBOARD
LBC RESET
LOOP1
LOOP2
LOOP3
LOOP4
DC CONVERTER
Cooling element
HOAN-RAM
HOAN-PROG
HOAN-PROS
BATTERY
12V / 17Ah
BATTERY
12V / 17Ah

Picture 8-4

- AC-power output from the power transformer is connected to terminals 24 VAC ACIN. The power transformer to use is tufvassons PVS 29/150 (29 VAC / 150 VA).

8.2. The ProDex-MB, mother board

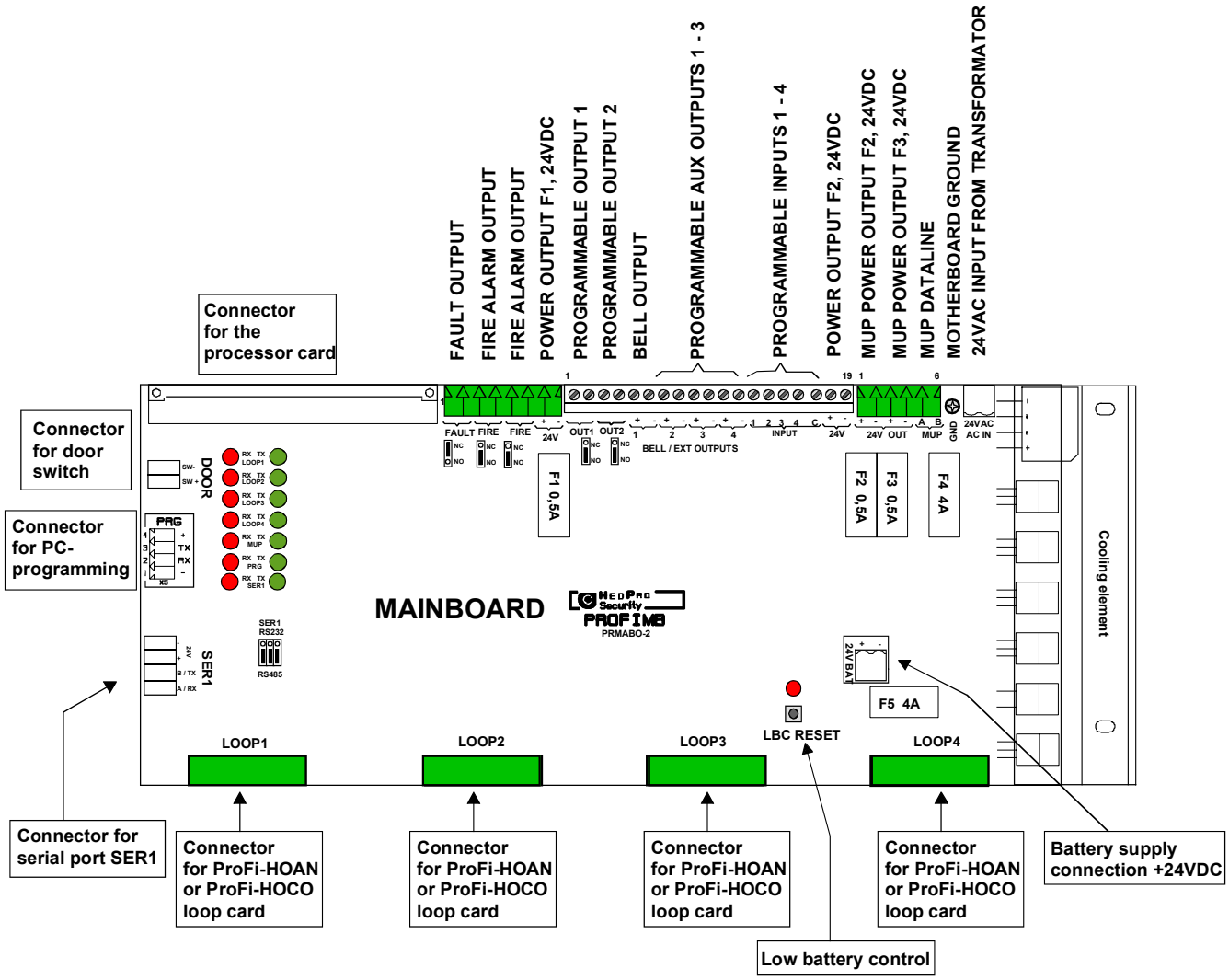

Picture 8-5

8.2.1. LBC (Low Battery Control)

The motherboard has a built in low battery control which prevents the batteries from being damaged if the pole voltage goes critically low.

The LBC function disconnects the battery when the voltage goes lower then 20V. This function is indicated with the red led beside the battery connector. The LBC function can be reset when the voltage of the batteries is higher then 20V. The resetting is done by pressing the LBC reset pushbutton beside the LBC led.

8.2.2. Power outputs, inputs / Fuses

Function	Fuse	Ratings	Terminals	Connector
Power output for routing equipment	F1	24 VDC / 0,5A	7(+), 8(-)	X2
General power output, for e.g. loop devices	F2	24 VDC / 1A	18(+), 19(-)	X3
Power output for ProDex-MUP (A)	F2	24 VDC / 1A	1(+), 2(-)	X4
Power output for ProDex-MUP (B)	F3	24 VDC / 1A	3(+), 4(-)	X4
AC power input from transformer	F4	6.3A		X5
Power output for battery charge	F5	6.3A		X9
Battery cable		6.3A		

DC converter, DCCONV

The DC converter is used when you connect Dual zone modules, CHQ-Z or Bell modules, CHQ-B to the analog loop. These devices require a DC input of 20V and 19.2V.

This DC converter switches the voltage up, so that the voltage is always over 23.5V. Due to the switching of the voltage the unit has an efficiency coefficient, which must be considered when calculating the needed battery capacity. The power consumption of all devices, which are connected to the DC converter, must be multiplied with the coefficient.

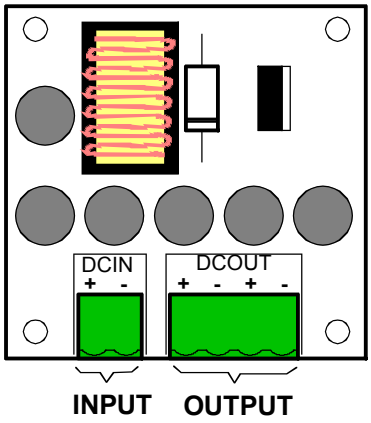

Picture 8-6

Type	DC Converter
Input voltage **[VDC]**	19 – 30
Output voltage **[VDC]**	23.5 – 29.5
Maximum ripple **[V]**	0.5
Current consumption **[mA]**	20
Efficiency coefficient	1.4
Dimensions **[l x w x h] [mm]**	55 x 57 x 25
Accessories	4 x plastic clamp

Installation:

1. The unit is placed inside the control panel housing. There is a reserved place with holes for the plastic clamps.
2. Mount the clamps into the holes in the housing.
3. Push the PCB into the clamps.
4. Connect the **24VDC output F2**, terminals **18** + and **19 -** of the control panel, to the input terminals of the DC converter.
5. Connect the 24VDC supply cable of the loop modules to the output terminal of the DC converter.
6. The DC converter has two DC output terminals, which allows more conductors to be connected.

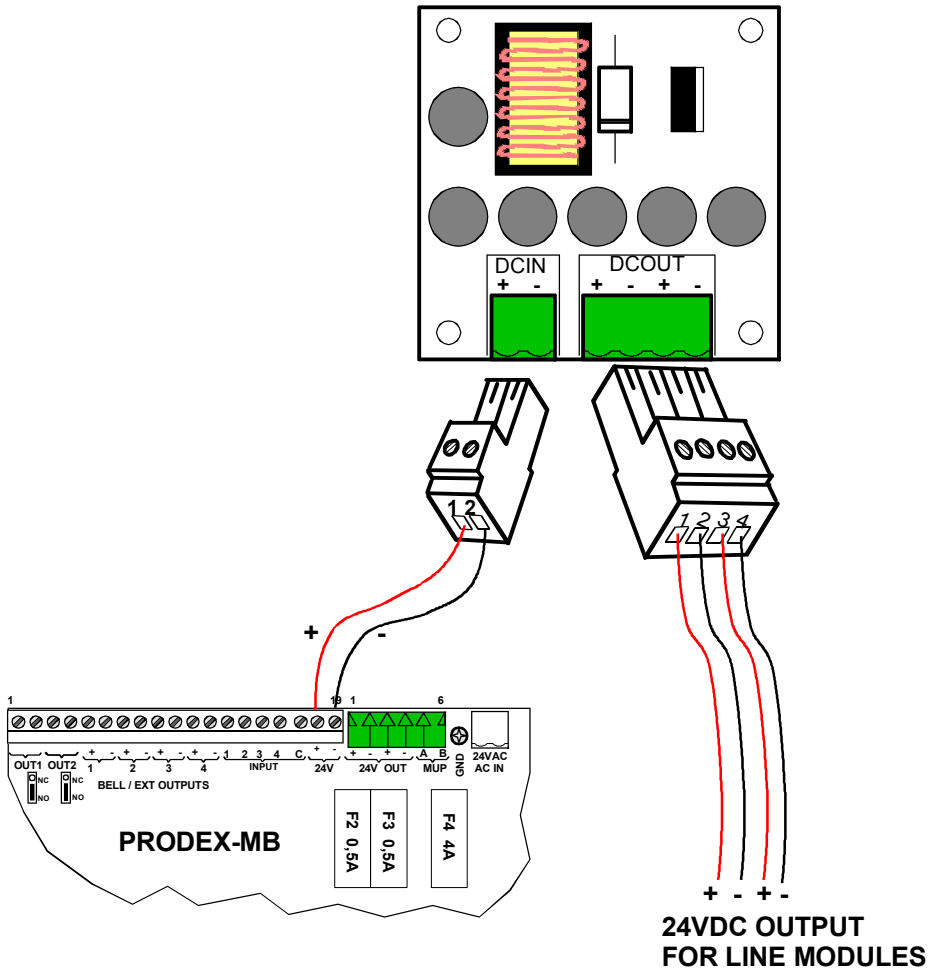

Picture 8-7

Calculations:
The current consumption of all modules, which are connected to the DC converter output, must be multiplied with the efficiency coefficient.

The formula is:

I_{tot} (quiescent) = 1.4 x (I_1 x nn + I_2 x nn)
I_{tot} (maximum) = 1.4 x (I_{1max} x nn + I_{2max} x nn)

Where:
- Itot = Total current consumption, drawn from the control panel 24VDC output.
- I1 = Quiescent / Maximum current consumption of module type CHQ-Z.
- I2 = Quiescent / Maximum current consumption of module type CHQ-B.
- nn = Count of modules of each type.

The value Itot must never exceed the rating of the control panel voltage output.
This formula is also applied for battery backup calculation, where both quiescent and maximum current is calculated.

8.2.3. Serial leds

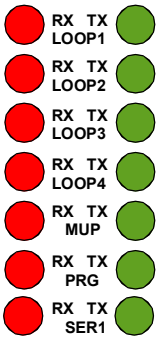

Picture 8-8

The RS-leds are as follows:

- LOOP1, RX = Data received from the loop card, TX = Data sent by the control panel to the loop card.
- LOOP2, RX = Data received from the loop card, TX = Data sent by the control panel to the loop card.
- LOOP3, RX = Data received from the loop card, TX = Data sent by the control panel to the loop card.
- LOOP4, RX = Data received from the loop card, TX = Data sent by the control panel to the loop card.
- MUP, RX = Data received from a MUP (user panel), TX = Data sent to a MUP.
- PRG, RX = Data received from the device attached to port PRG, TX = Data sent to the device attached to port PRG.
- SER1, RX = Data received from the device attached to port SER1, TX = Data sent to the device attached to port SER1.

8.2.4. PC-connection

The PRG-port settings are:

- Speed 9600 bps.
- Data bits 8.
- Parity None.
- Stop bits 1.

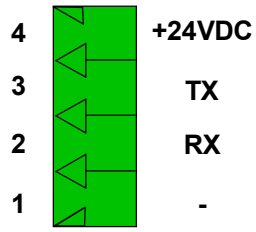

Picture 8-9

The PC-port works only when the control panel cover is open.

Communicating with the PC-software trough the PRG-port:

- Connect the PC-cable plug to connector PRG.
- Start the ProDex Setup PC-program.
- Choose system file to open, or create a new system.
- To program the system you must unlock the system by sending the unlocking code from the programming software.
- When reading or sending data the PRG-port leds RX and TX should blink alternately.

The PC-cable connection is as follows:

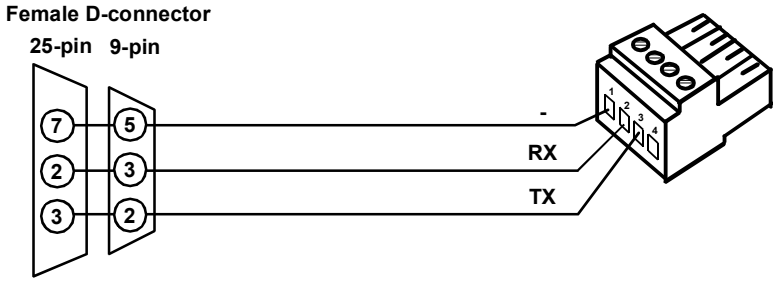

Picture 8-10

8.2.5. SER1 serialport

The control panel has an additional serial port. This serial port can be configured to RS232 or RS485 communication.

The communication is set with jumpers JP6, JP7 and JP8:

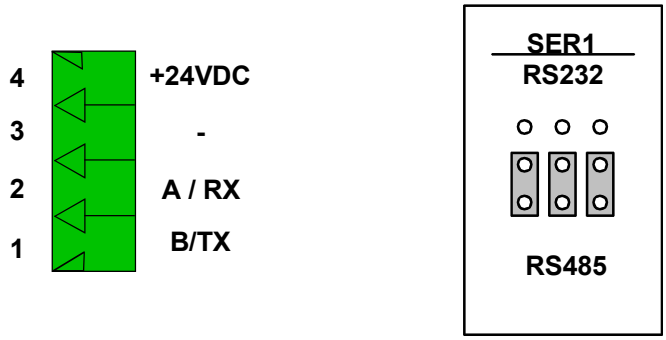

Picture 8-11

All 3 jumpers must be set to the same communication mode.

The factory setting of the port is RS485.

8.2.6. Outputs

The control panel has the following outputs:

Output	Type	NC /NO	Ratings	Monitored	Termination	Programmable	Terminals	Connector
Fault	Relay	Yes, JP1	24 VDC/ 1A	No	No	No	1,2	X2
Fire	Relay	Yes, JP2	24 VDC/ 1A	No	No	No	3,4	X2
Fire	Relay	Yes, JP3	24 VDC/ 1A	No	No	No	5,6	X2
OUT1	Relay	Yes, JP4	24 VDC/ 1A	No	No	Yes	1,2	X2
OUT2	Relay	Yes, JP5	24 VDC/ 1A	No	No	Yes	3,4	X2
BELL	Voltage	No	24 VDC/ 300 mA	Yes for short and open circuit	1kΩ / 2W resistor	No	5(+), 6(-)	X3
EXT1	Voltage	No	24 VDC / 300 mA	Yes for short and open circuit	1kΩ / 2W resistor	Yes	7(+),8(-)	X3
EXT2	Voltage	No	24 VDC / 300 mA	Yes for short and open circuit	1kΩ / 2W resistor	Yes	9(+), 10(-)	X3
EXT3	Voltage	No	24 VDC / 300 mA	Yes for short and open circuit	1kΩ / 2W resistor	Yes	11(+), 12(-)	X3

Programmable Bell / Ext output types: C, E, G, J

The 4 Bell/Ext outputs can be programmed to the following types:

- C-type, Bell output.
- E-type, Fire alarm routing output.
- G-type, Fire protection output.
- J-type, Fault routing output.

When using other output types then C-type, you have to use the ProDex-OPCO connection card.

Prodex-OPCO card

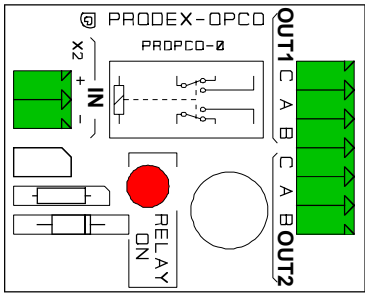

Picture 8-12

The ProDex-OPCO connection card is used for connections from the control panel BELL / EXT outputs to other equipment. The card can be used with the G-, J- and E-type outputs.

Use MHS-type cable for the ProDex-OPCO. The maximum cable distance from the control panel to the card is 1000m. The connection requires 1 pair.

The card converts a voltage output, which is monitored for short and open circuit, to a potential free relay output. The relay can either work as a Normally Closed (NC) output or as a Normally Open (NO) output. There are 2 outputs, which are similar, OUT1 and OUT2. The both outputs are activated simultaneously. The card must be placed inside the external device housing. The card has an EOL termination so no additional termination is used.

Type	Prodex-OPCO
Current consumption [mA]	10
Input [VDC]	18 – 28.5
Output	2 Potential free relays (configurable NC / NO)
Dimensions	38 x 48 x 20
Accessories	4 Plastic snap-in supports

Terminal	Type	Note!	Connection
IN +	Input +		MABO, BELL or EXT +
IN -	Input -		MABO, BELL or EXT -
OUT1 C	Common for OUT1		Common for external device input
OUT1 A	Normally open output, OUT1	**Normally closed output, OUT1 if J-type output**	Input to the external device
OUT1 B	Normally closed output, OUT1	**Normally open output, OUT1 if J-type output**	Input to the external device
OUT2 C	Common for OUT2		Common for external device input
OUT2 A	Normally open output, OUT2	**Normally closed output, OUT2 if J-type output**	Input to the external device
OUT2 B	Normally closed output, OUT2	**Normally open output, OUT2 if J-type output**	Input to the external device

The connection:

- The BELL/EXT output from the ProDex MABO is connected to the IN terminal of the ProDex-OPCO card.
- The OUT1 / OUT2 terminals of the ProDex-OPCO card is connected to the external device.

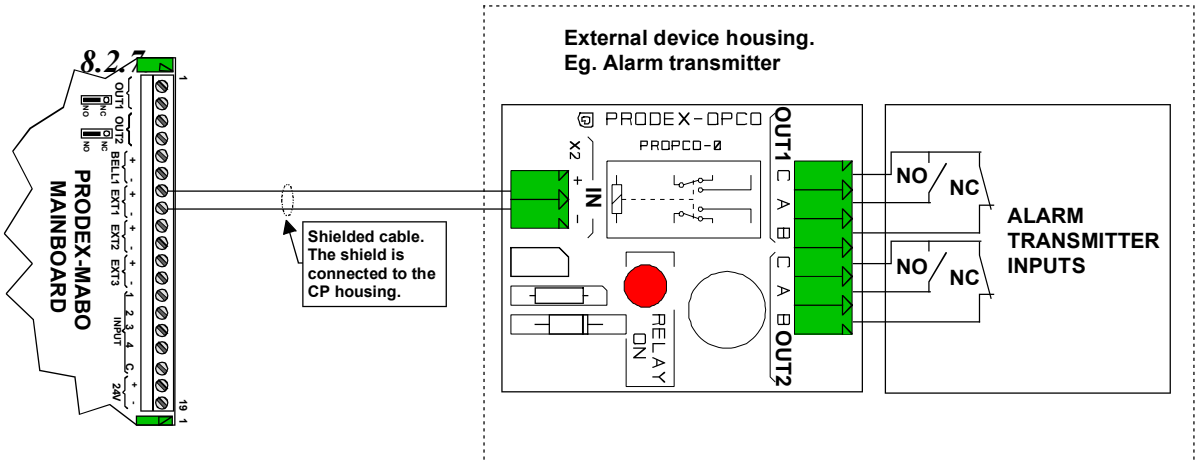

Picture 8-13

Inputs

The control panel has the following inputs:

Input	Function	Ratings	Programmable	Terminals	Connector
1	NO (normally open)		Yes	13,17 (Common)	X3
2	NO (normally open)		Yes	14,17 (Common)	X3
3	NO (normally open)		Yes	15,17 (Common)	X3
4	NO (normally open)		Yes	16,17 (Common)	X3
C	Common			17	X3



Use MHS-type cable for the inputs. The maximum cable distance from the control panel to the input is 1000m. The connection requires 1 pair.

8.3. The processor card

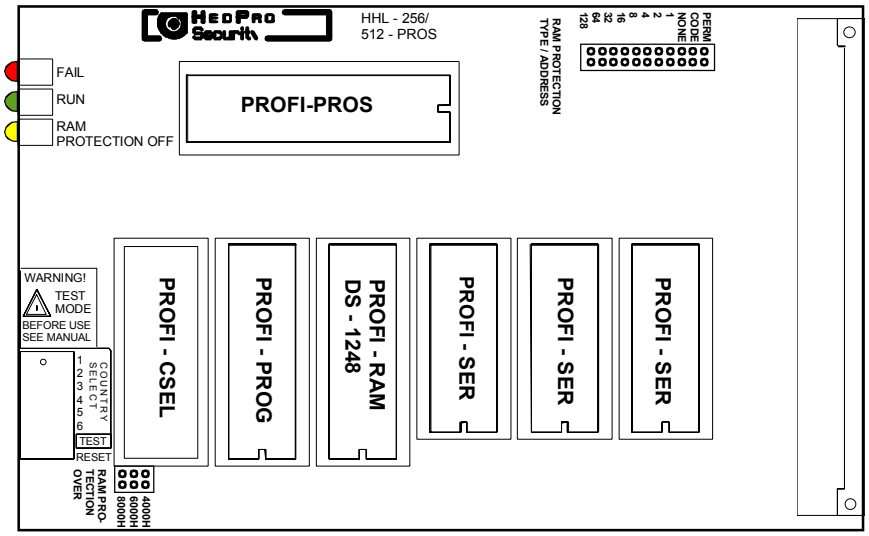

Picture 8-14

These are the default settings for the processor card:

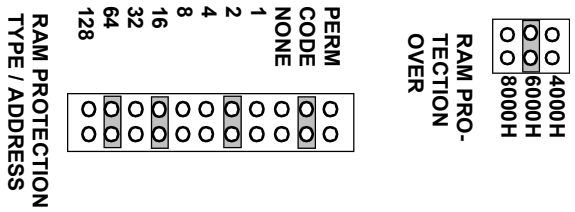

Picture 8-15

These settings are under no circumstances to be changed; changing may cause loss of data or program fault.

The processor card has 3 leds, which indicates:

- FAIL, red = program execution stopped (reset).
- RUN, green = blinks when the program is running.
- RAM PROTECTION OFF, yellow = is on when the PC is connected to the control panel and the unlocking code has been entered. The led is also switched on if the ram protection function is disabled. The led is switched automatically off when the PC-connection is unplugged and the control panel cover has been closed. **The MUP led test mode indicates the state of the RAM PROTECTION. Test mode led ON = RAM PROTECTION OFF.**

If the processor card must be removed or the program versions must be changed for some reason the mains power and the battery power must be switched off before card or prom removal.

The program execution can be stopped by switching the RESET-switch in ON-position. The program restarts when the RESET is switched back in OFF-position.

8.3.1. Language settings

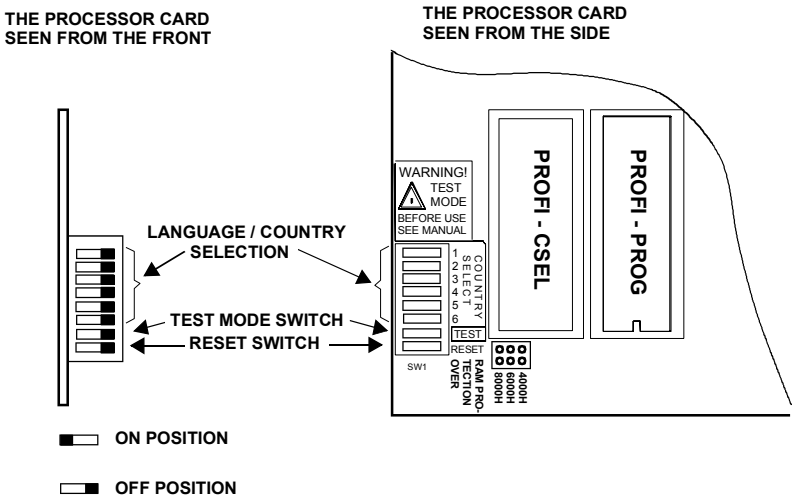

Picture 8-16

The control panel's factory language setting is ENGLISH (all switches OFF).

The following language settings are possible:

Dip switch	1	2	3	4	5	6
Language						
English	OFF	OFF	OFF	OFF	OFF	OFF
Finnish	ON	OFF	OFF	OFF	OFF	OFF
Swedish	OFF	ON	OFF	OFF	OFF	OFF

9. The Main User Panel (ProDex-MUP)

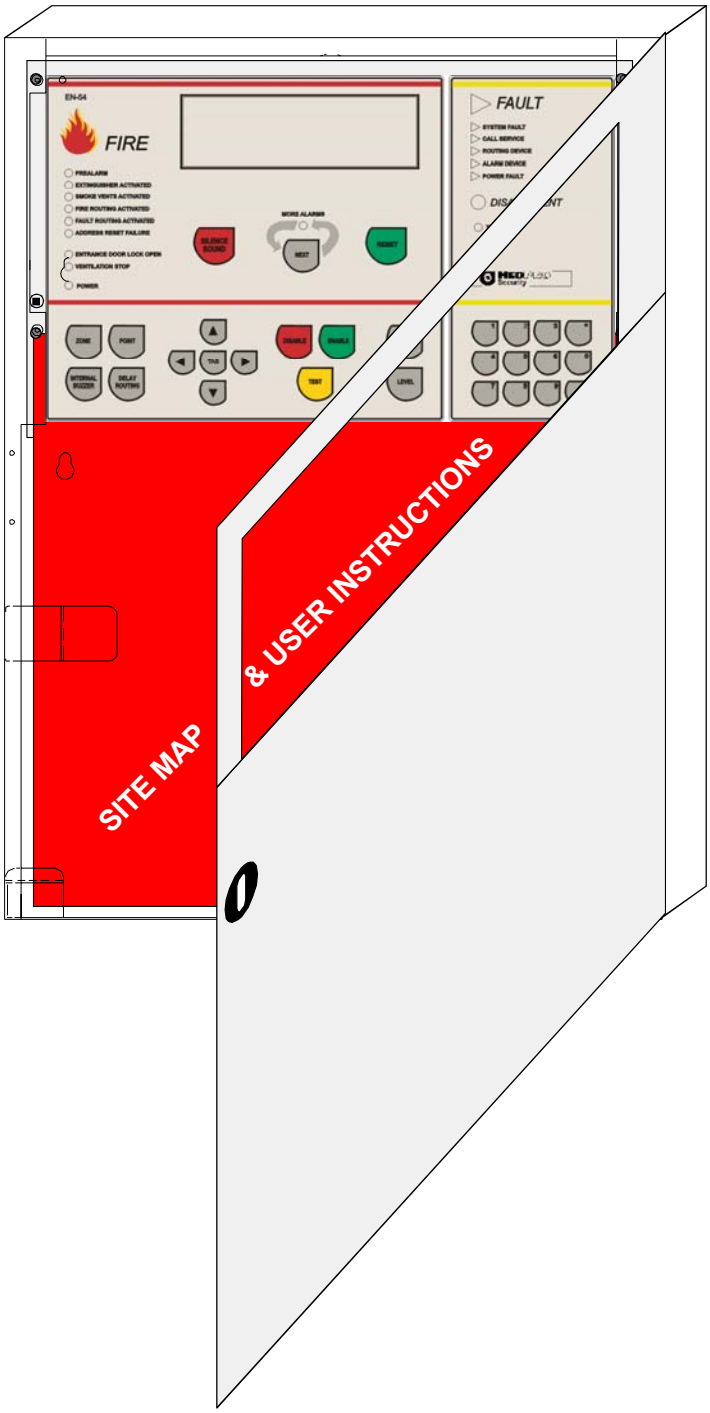

Picture 9-1

9.1. General

According to EN54 the panel with information regarding the system must be placed at the entrance of the building (where the fire department is supposed to enter the building).

The user panels, max. 8, are connected in parallel to the line. The network can have separate branches. See picture. The total cable length (for all user panels) must not exceed 500m.

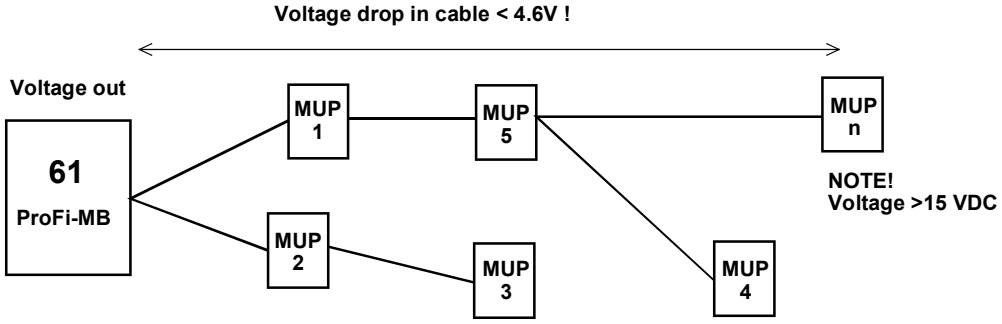

Picture 9-2

	prodex-MUP
Feature	
Operating voltage [V]:	
Minimum	15
Nominal	24
Maximum	40
Current consumption [mA]:	
Minimum (backlight off, 24V)	45
Maximum (backlight on, 15V)	220
Cabling:	
Maximum distance [m]	500
Maximum capacitance [µF]	0,15
Connection:	RS485/RS232
Size [l x w x h] [mm]:	510x380x70

Picture 9-3

Technical data:

9.2. Cable dimensioning / Voltage measurement

Use MHS-type cable for the user panel.

The conductor pair resistance for MHS cable is 188Ω / km.

The **ProDex-MUP user panel needs an at least 6 conductors** for power and data, depending on cable distance. 2 conductors are used for the data line, 2 conductors for power supply 1 and 2 conductors for power supply 2.

The minimum output voltage from the control panel power outputs is 19.6V. This voltage level is when the control panel is powered by battery only and the battery voltage is at its lowest possible level.

When the output voltage is 19.6V you can loose 4.6V to the cabling (minimum operating voltage for the MUP is 15V).

With one MUP your cable resistance must be less then:

R = Ucable / Imax, where Ucable = 4.6V, Imax = 220mA
R = 4.6 / 0.22 = 20.9Ω.

Your maximum cable distance with one control panel is and one conductor pair for each voltage (= 1 pair for voltage A and 1 pair for voltage B)
l = 1000m / 188Ω* 20.9Ω
l = 111m

With the cable type MHS 3x2 (1 pair for voltage A, 1 pair for voltage B and 1 pair for data line you can connect **one MUP** at a maximum cable distance of 111m.
With the cable type MHS 5x2 (2 pairs for voltage A, 2 pairs for voltage B and 1 pair for data line you can connect **one MUP** at a maximum cable distance of 222m.

If you have **more the one MUP** one the same cable the maximum cable distance is divided by the count of MUP's.



After power up you must verify the voltage at all MUP's. The voltage drop in the cabling must in any case be less then 4.6V!
Open the control panel ProDex MB door, now system detects the opening and indicates it as a fault. This will light the backlights at all MUP's = maximum current consumption is achieved.
Measure the output voltage from the control panel power outputs.
Measure the voltage at the MUP power input.
The difference of these two voltages must be less then 4.6V!

9.3. Installation steps

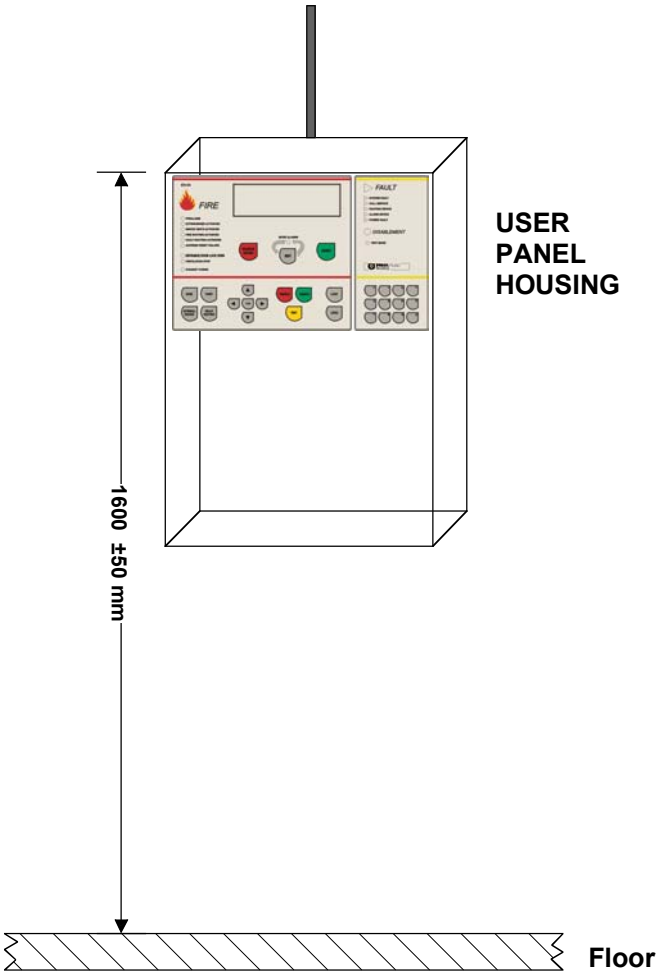

Picture 9-4

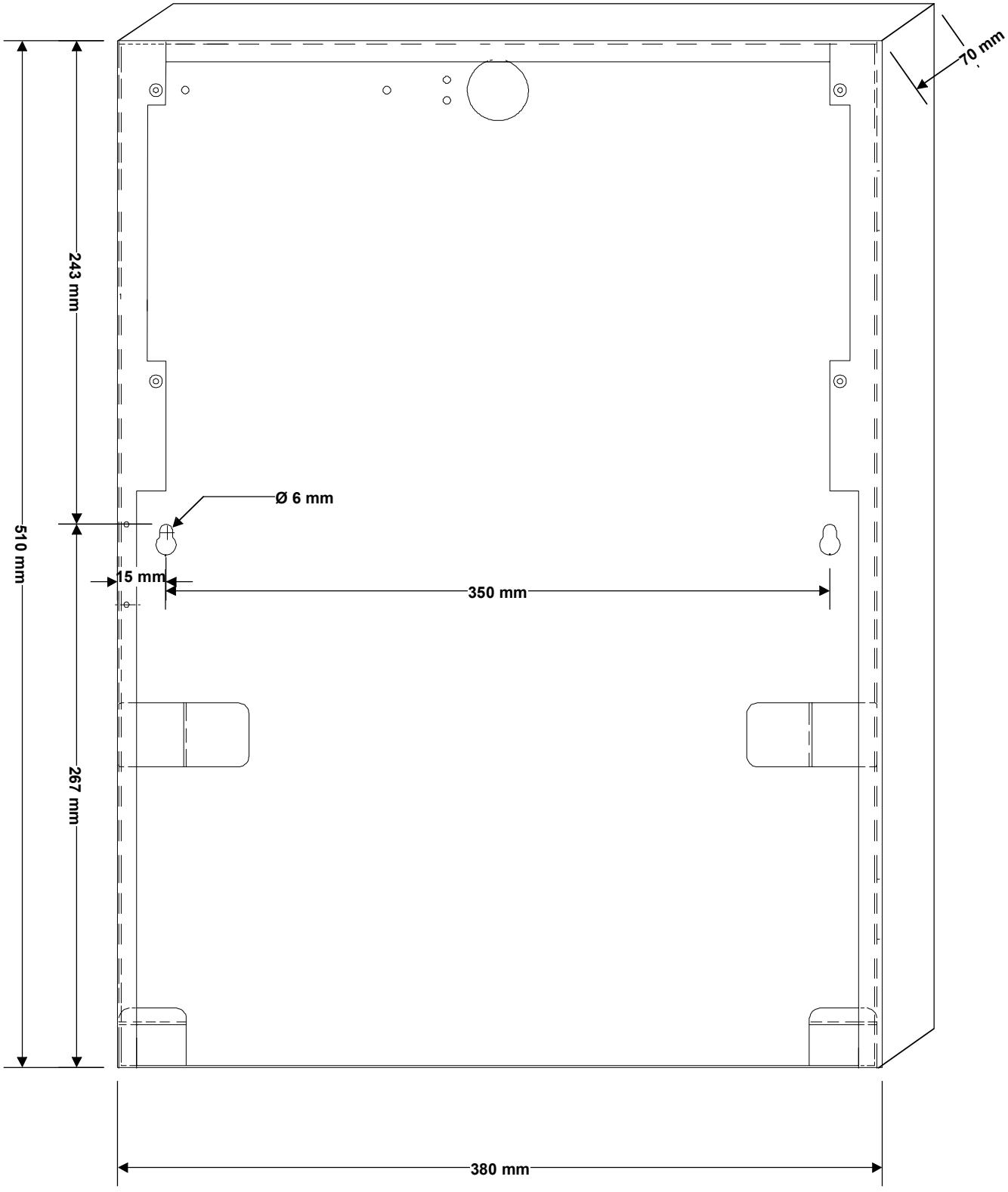

Picture 9-5

Picture 9-6

The installation height measured from the floor to the upper level of the housing is 150 mm ± 10 mm. The height is given because the graphics display is viewed best from this level (normal persons eye height). The User panel housing is made so that the cables can run beneath the housing.

1. Drill 2 10-mm2 holes for the picking anchors. See picture, for detailed positions for the holes.
2. Hammer the picking anchors into the holes.
3. Lift the housing up on the wall and mount it with 2 6-mm2 bolts.
4. Cut all cables suitable for the installation. Note! Leave at least 400 mm long conductors, because the connectors are on the right hand side of the user panel. You must also be able to set the address, adjust the contrast etc after the connectors are plugged.
5. Drag the cables trough the entry hole in the housing.
6. Peal the cables suitable. Note that the shield of all cables must be as short as possible. The shield is connected to the shield connection beside the entry hole.
7. You must use a ferrite to the cable. The ferrite is placed on the inside of the housing at the cable entry hole.

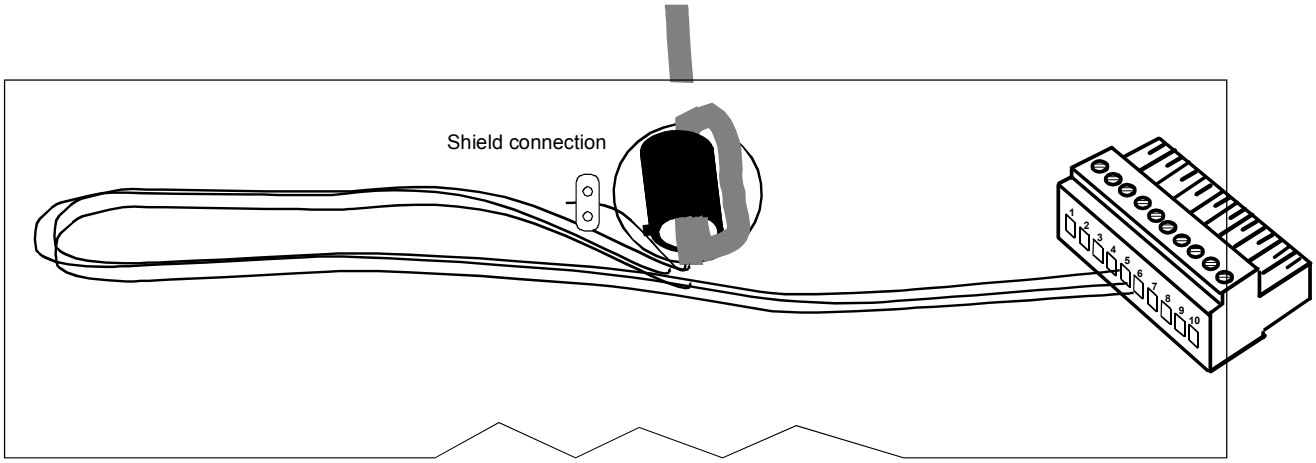

Picture 9-7

8. Connect the cable from the control panel to the 10 pin. connector of the MUP.
9. Don’t connect the cable conductors at the control panel end

Follow the procedure in chapter Measuring. Before proceeding.

After this check you are allowed to connect the signal cords to the control panel connector.

The user panel is mounted to the housing with 4 3-mm^2 screws which are supplied.

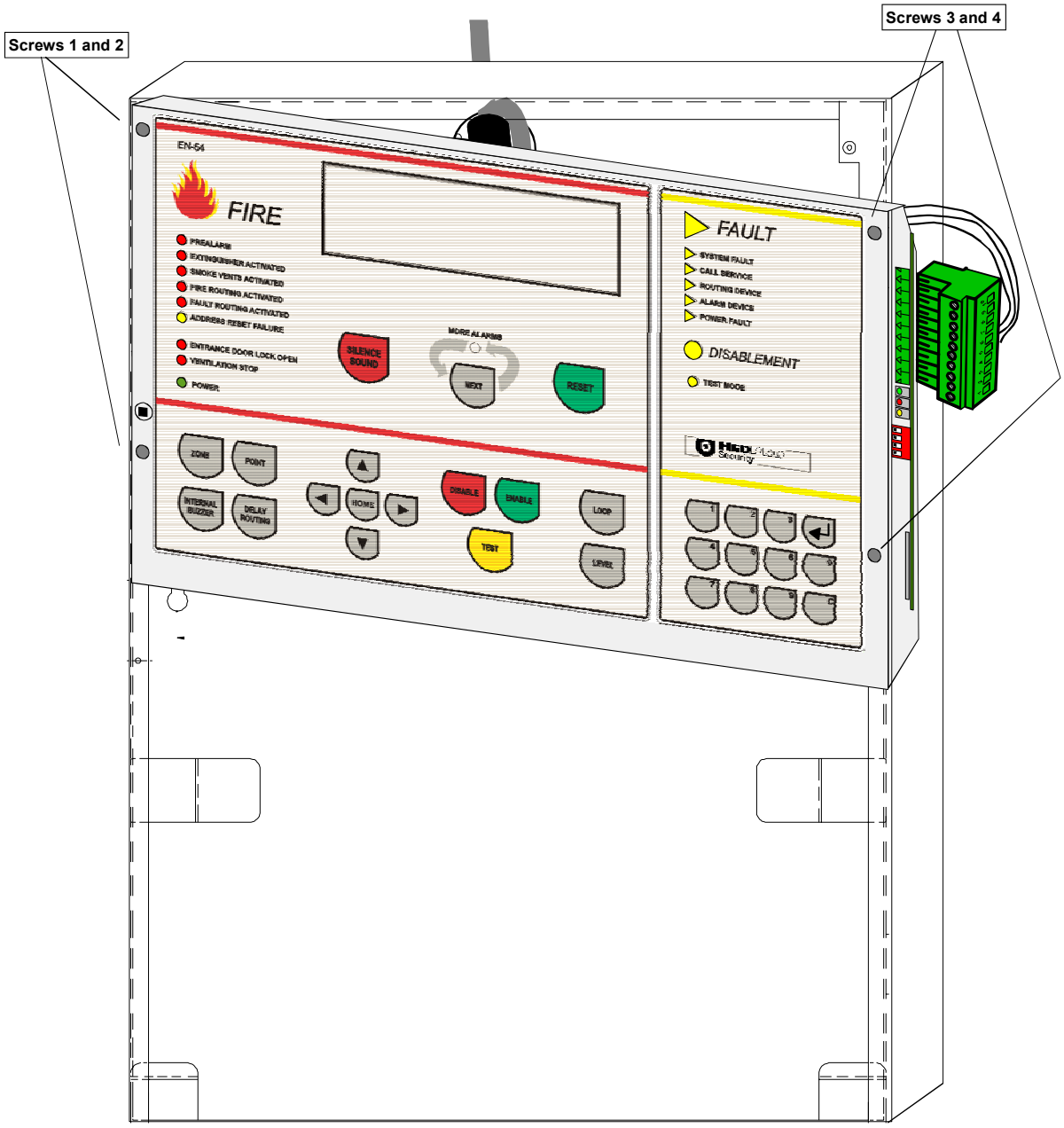

Picture 9-8

1. Mount the user panel to the housing with screws 1 and 2 only.
2. Don't tighten the screws. Screw them only so firm that they keep the user panel.
3. The screws 1 and 2 are used as a hinged joint so that the cable connector can be connected to the user panel.
4. Connect the cable connector to the user panel.
5. Press the user panel into the housing and screw screws 3 and 4.
6. Tighten all 4 screws.
7. Mount the housing door to the housing.
8. Lock the user panel door.

Below the user panel, in the housing, there is place for a site map and instructions for the system.

9.4. Connections / settings

User panel connectors
viewed from right hand side

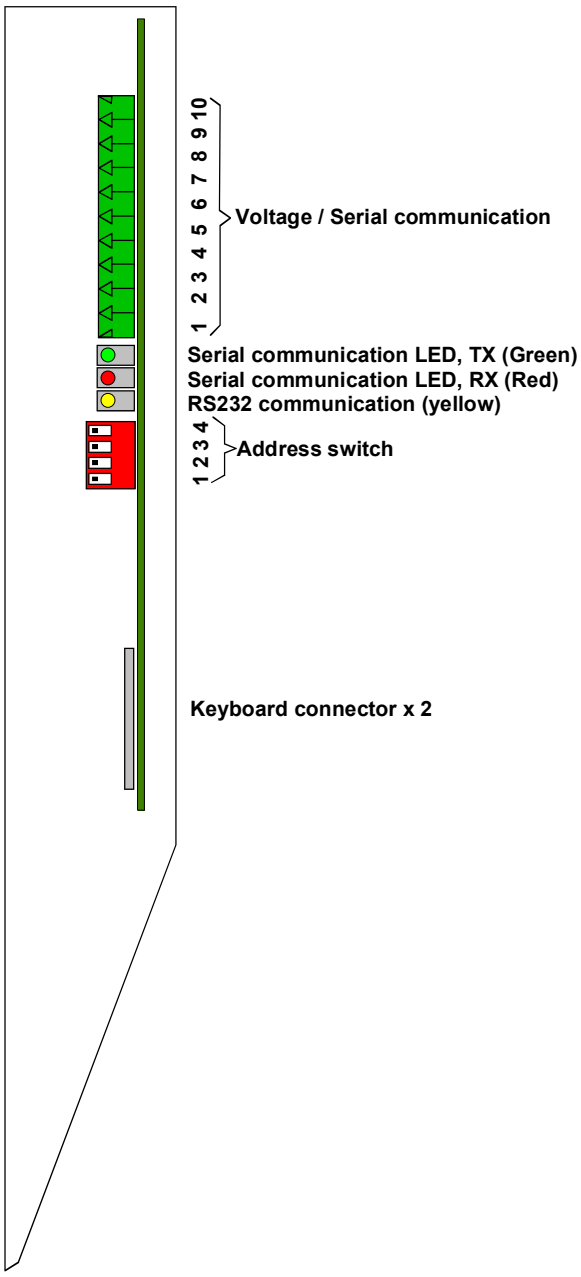

Picture 9-9

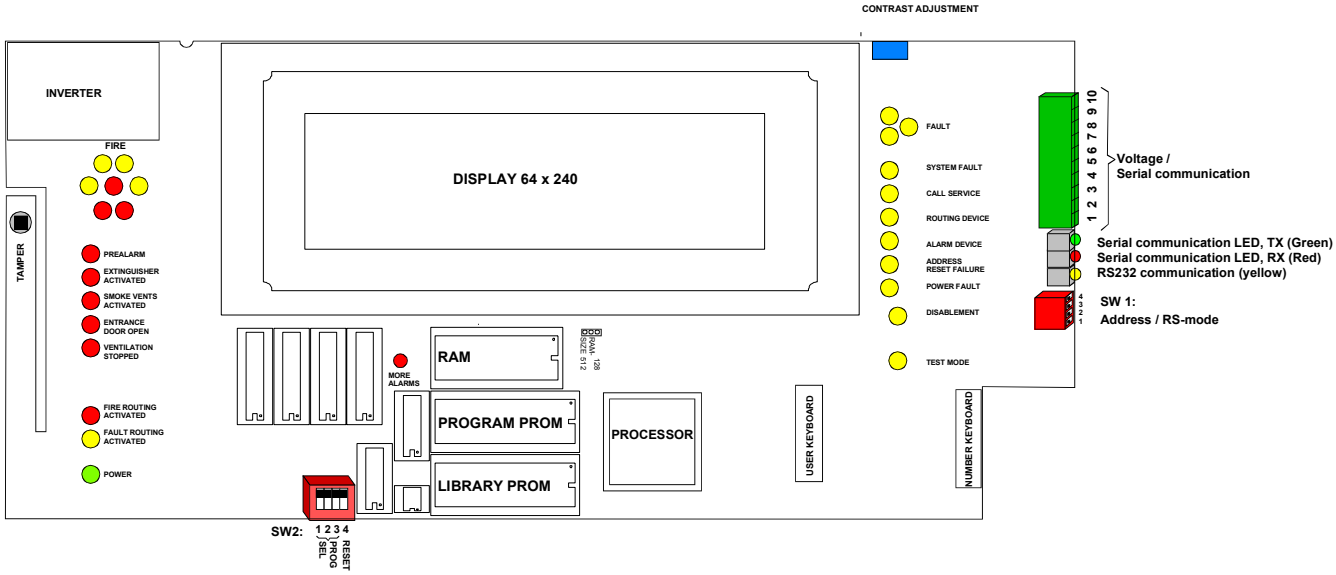

Picture 9-10

The connection of the 10-pin MUP connector (voltage and serial communication):

MUP explanation	MUP connector number	ProDex MB explanation	Control panel (ProDex MB) connector number
DC input A +	1	24 VDC + (F2)	X13, 1
DC input A –	2	24 VDC - (F2)	X13, 2
DC input B +	3	24 VDC + (F3)	X13, 3
DC input B –	4	24 VDC - (F3)	X13, 4
RS485 A	5	MUP A	X13, 5
RS485 B	6	MUP B	X13, 6
RS232, -	7		
RS232, RX	8		
RS232, TX	9		
Shield	10		Shield connection (housing)

The address / communication mode switch SW1:

Address:	SW1 / 1	SW1 / 2	SW1 / 3
1	**OFF**	**OFF**	**OFF**
2	**ON**	**OFF**	**OFF**
3	**OFF**	**ON**	**OFF**
4	**ON**	**ON**	**OFF**
5	**OFF**	**OFF**	**ON**
6	**ON**	**OFF**	**ON**
7	**OFF**	**ON**	**ON**
8	**ON**	**ON**	**ON**

Switch SW1 / 4 must always be in position OFF.

If you need to modify the settings of SW2 you must remove the PCB from it's metal housing. This is done by removing the 2 screws placed on the bottom side of the user panel housing.

Switch SW2:

Function:	Switch number:	Explanation
Language selection	SW2 / 1	Sets the active language
Language selection	SW2 / 2	Sets the active language
Language selection	SW2 / 3	Sets the active language
Reset	SW2 / 4	High = OFF, Low = ON

The user panel's factory language setting is dependent on the membrane language.

The following language settings are possible:

Dip switch	1	2	3
Language			
English	OFF	OFF	OFF
Finnish	ON	OFF	OFF
Swedish	OFF	ON	OFF

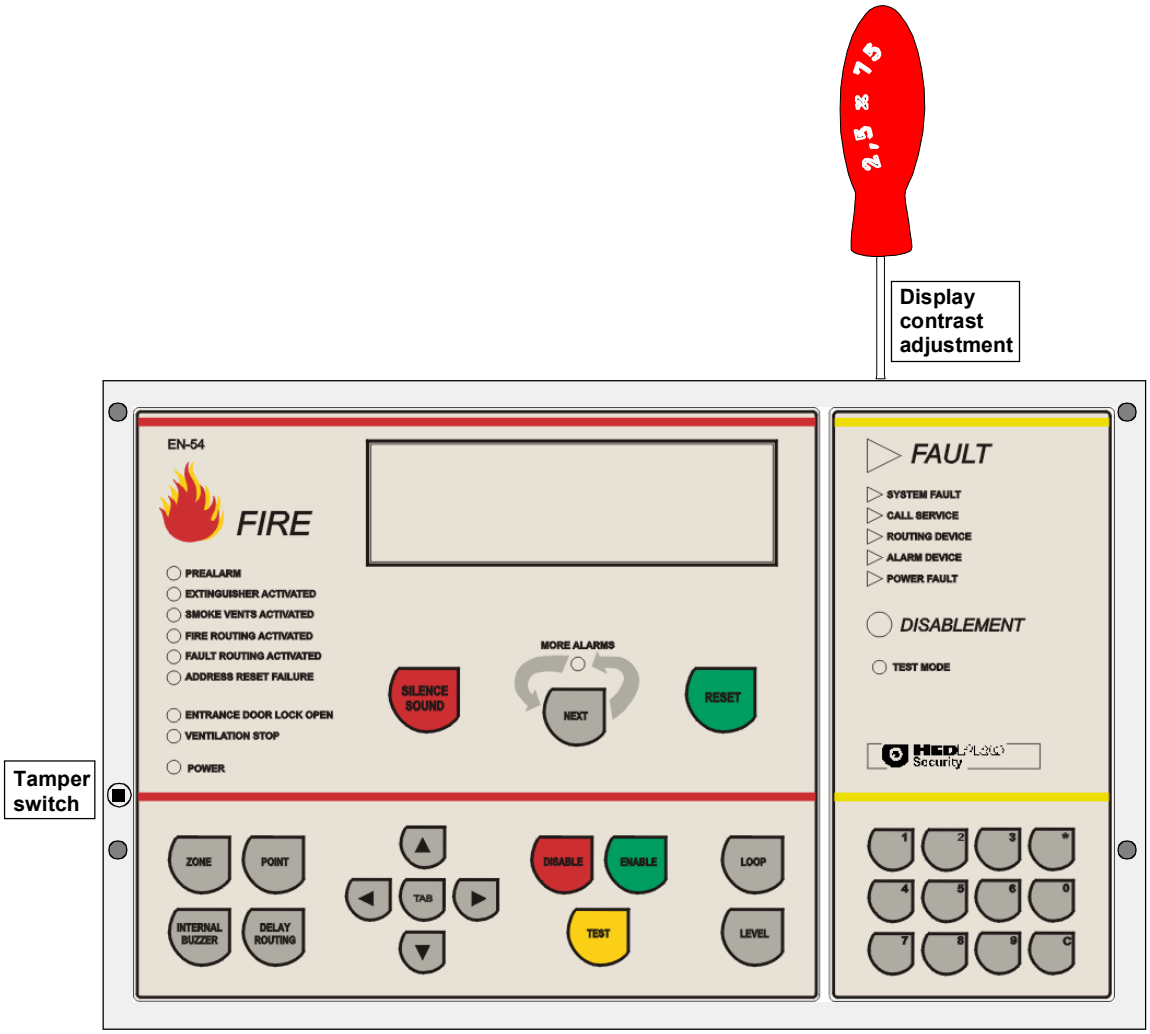

Picture 9-11

The display contrast is pre adjusted. If adjustment is needed it can be done with the potentiometer.

10. Connection of fire alarm devices

10.1. General

The control panel has **one BELL** output standard. There are also 3 other outputs (EXT1 – EXT3), which have the same electrical characteristic (24 VDC voltage output with short and open circuit monitoring).

You can connect both Bells and Sounders to the same output. Note the current consumption and the voltage range for the different types.

On an analog system you can connect fire alarm bells with the CHQ-B module, which is connected to the loop. See chapter Bell Module, CHQ-B.

On an analog system you can also connect loop powered Base sounders as separate modules or as bases for sensors. See chapter The base sounder CHQ-BS.

In general the connection of bells to the control panel BELL output is as follows:

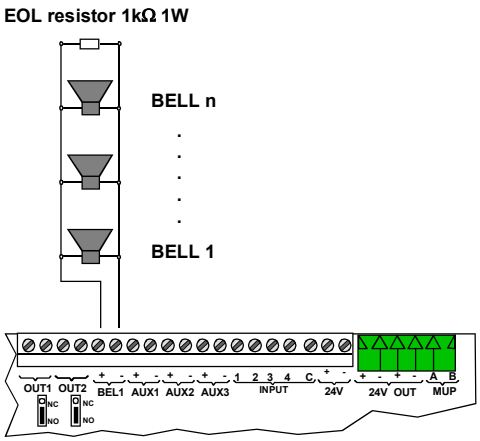

Picture 10-1

Use MHS-type cable for the Bells. The maximum cable distance from the control panel to the Bell is 1000m.

The conductor pair resistance for MHS cable is 188Ω / km.

10.2. The Fire bell, MSB-6B/24V

- The MSB-6 is a 6-inch 'gong' bell.
- The sound output at 3m (24 VDC) is 80 dBA.
- Current consumption (sound on) 28 mA.
- Operating voltage range 16 – 33 VDC.
- Operating temperature range 0 – 50°C.
- The minimum mounting height from the floor must be at least 2.4m, or as close to the ceiling as possible.



Picture 10-2

Dimension:

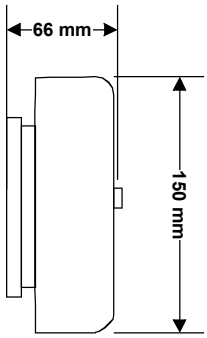

Picture 10-3

10.2.1. Installation steps

The surface mounting box BBX-4, which ingress protection is IP54.

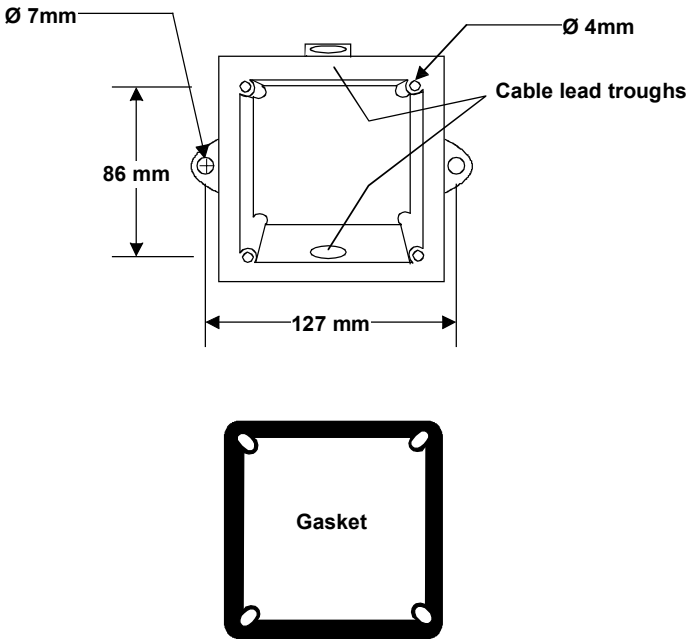

Picture 10-4

The Bell is mounted onto the BBX-4 box.

1. Use 5-mm ∅ screws.
2. Drill 2 holes horizontally (if the cable entry hole is wanted down or up) on a distance of 127 mm for the screws or screw plugs.
3. Mount the box with 2 screws.
4. Drag the cable(s) through the box cable entry.
5. Cut the cable(s) suitable for the bell.
6. Plug the left over entry hole in the box (the plug is included).
7. Peal the cable.
8. Peal the conductors so that there is no unisolated conductor outside the terminals.
9. Mount the gasket.
10. Connect the conductors to the bell terminals. Note! The polarity of the terminals.
11. Connect the bell unit to the box and the gasket with 4, 4-mm ∅ screws. (The screws are included). Don't tighten the screws so hard that the gasket is depressed.

10.2.2. Connection

The Bell has 2 terminals + and – which are connected to:

- The ProDex MB motherboard connector BELL, (EXT 1-3).
- The CHQ-B bell module connected to the loop. Terminals B1 (+) and BC1(-) or B2(+) and BC2(-).
- The end of line resistor 1kΩ / 1W is connected at the last bell on the line.

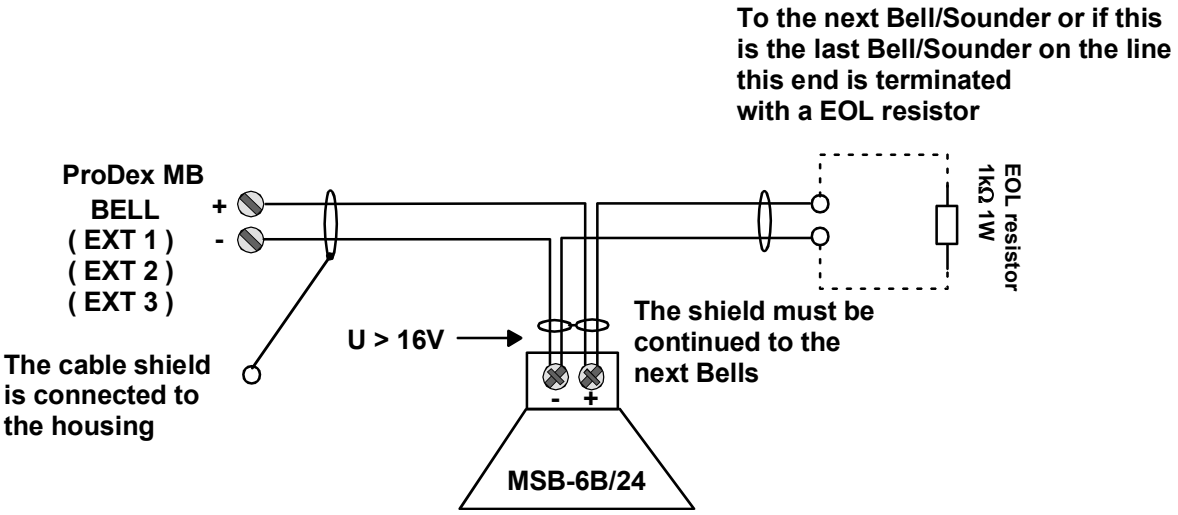

Picture 10-5

If you connect the bell to the CHQ-B bell module the connection is:

- The positive (+) terminal of the bell is connected to terminal B1 or B2 (if bell line 2).
- The negative (-) terminal of the bell is connected to terminal BC1 or BC2 (if bell line 2).
- The end of line resistor 1kΩ / 1W is connected at the last bell on the line.

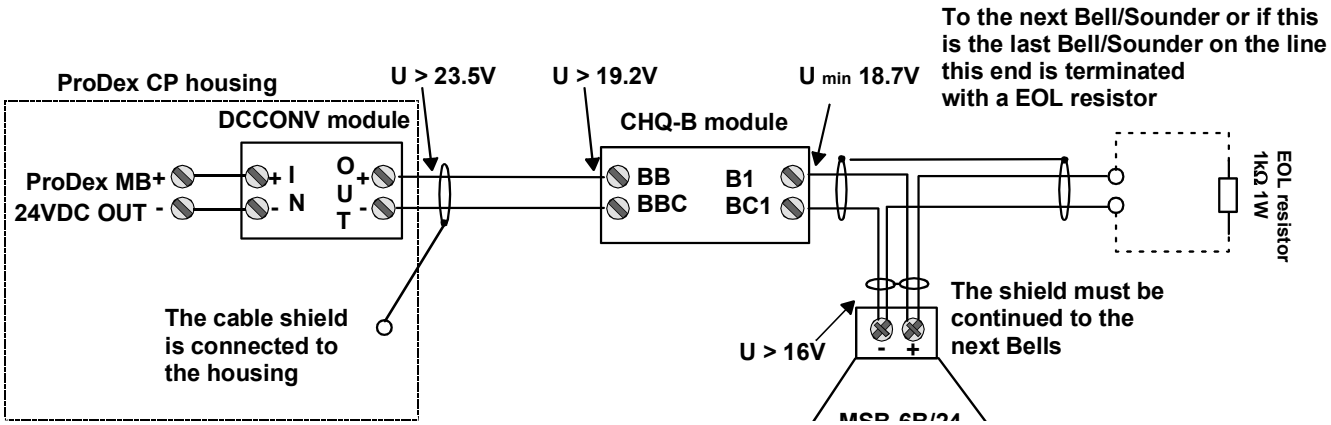

Picture 10-6

10.3. Fire sounders, Flashni, Roshni

10.3.1. Flashni sounder



Picture 10-7

- Ingress protection IP65.
- The sound output level at 1m is 101 dBA.
- Adjustable sound level (0 to -20 dB).
- Current consumption (sound on) 68 mA.
- Operating voltage range 18 – 30 VDC.
- Operating temperature range -10 – 50°C.
- Two different sounds outputs.
- Sound 1: Sweep 800~970 Hz at 1 cycle / s Medium Sweep (LF) BS5839 Part 1, 1988.
- Sound 2: Continuous at 970 Hz BS5839 Part 1, 1988.
- Dimensions 93 x 121 mm.

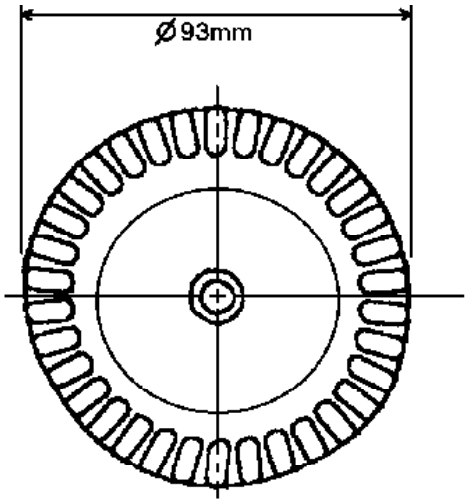

Picture 10-8

10.3.2. Roshni sounder

- Ingress protection IP65.
- The maximum sound output level at 1m is 111 dBA (sound 4 at 24 VDC).
- Adjustable sound level.
- Maximum current consumption 35 mA (sound 27 or 32).
- Operating voltage range 9 – 28 VDC.
- Operating temperature range -40 – 80°C.
- 28 different selectable sounds.
- Two different sound outputs.
- Weight 260g.
- Dimensions 93 x 105 mm.



Picture 10-9

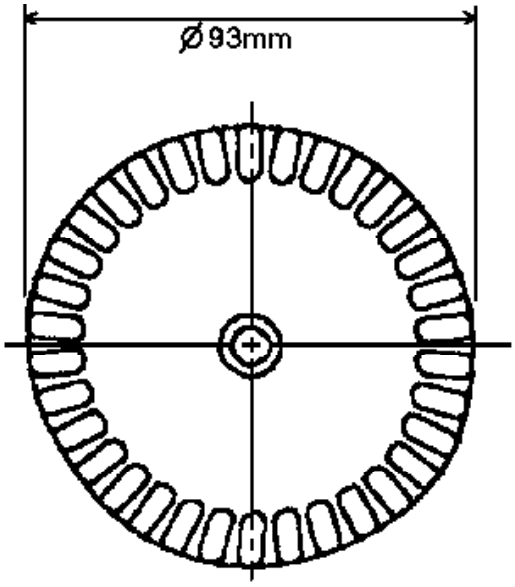

Picture 10-10

Sound settings with the Dip switch

N:o	DIP switch setting					Tone	2nd Tone	Description	Current consumption @ 24 VDC [mA]
	1	2	3	4	5				
1	ON	ON	ON	ON	ON	Alternating Tones 800/970 Hz, 1/4s/1/4s respectively	14	BS5839 Part 1, 1988	18
2	ON	ON	ON	ON	OFF	Sweep 800~970 Hz at 7 cycles per second	14	Fast Sweep (LF) BS5839 Part 1, 1988	18
3	ON	ON	ON	OFF	ON	Sweep 800~970 Hz at 1 cps	14	Medium Sweep (LF) BS5839 Part 1, 1988	18
4	ON	ON	ON	OFF	OFF	Continuous at 2850 Hz	14		32
5	ON	ON	OFF	ON	ON	Sweep 2400~2850 Hz at 7 cps	4	Fast Sweep	30
6	ON	ON	OFF	ON	OFF	Sweep 2400~2850 Hz at 1 cps	4		30
7	ON	ON	OFF	OFF	ON	Slow Whoop	14	Slow Whoop	20
8	ON	ON	OFF	OFF	OFF	Sweep 1200~500 Hz at 1 cps	14	Din Tone	16
9	ON	OFF	ON	ON	ON	Alternating Tones 2400/2850 Hz, 1/4s/1/4s	4		30
10	ON	OFF	ON	ON	OFF	Intermittent Tone 970 Hz, 1s On / 1s Off Back-Up Alarm (LF)	14	BS5839 Part 1, 1988	12
11	ON	OFF	ON	OFF	ON	Alternating Tones 800/970 Hz, 1/2s/1/2s	14	BS5839 Part 1, 1988	18
12	ON	OFF	ON	OFF	OFF	Intermittent Tone 2850 Hz, 1s On / 1s Off Back-Up Alarm (HF)	4		24
13	ON	OFF	OFF	ON	ON	Intermittent 970 Hz, 1/4s On /1s Off	14	BS5839 Part 1, 1988	8
14	ON	OFF	OFF	ON	OFF	Continuous at 970 Hz	14	BS5839 Part 1, 1988	20
15	ON	OFF	OFF	OFF	ON	Alternating 554/440 Hz, 100/400 ms	14	French Fire Sound	12
16	ON	OFF	OFF	OFF	OFF	Intermittent 660 Hz, 150 ms On / 150 ms Off	16	Swedish Alarm Tone	9
17	OFF	ON	ON	ON	ON	Intermittent 660 Hz, 1.8s On / 1.8s Off	17	Swedish Alarm Tone	12

18	OFF	ON	ON	ON	OFF	Intermittent 660 Hz, 6.5s On / 13s Off	18	Swedish Alarm Tone	14
19	OFF	ON	ON	OFF	ON	Continuous 660 Hz	19	Swedish Alarm Tone	14
20	OFF	ON	ON	OFF	OFF	Alternating 554/440 Hz, 1s/1s	20	Swedish Alarm Tone	13
21	OFF	ON	OFF	ON	ON	Intermittent 660 Hz, 1/2s On /1/2s Off	21	Swedish Alarm Tone	10
22	OFF	ON	OFF	ON	OFF	Intermittent 2850 Hz, 150 ms On / 100 ms Off	14	Pelican Crossing	22
23	OFF	ON	OFF	OFF	ON	Sweep 800~970 Hz at 50 cps	14	Low Frequency Buzz BS5839 Part 1, 1988	18
24	OFF	ON	OFF	OFF	OFF	Sweep 2400~2850 Hz at 50 cps	4	High Frequency Buzz	25
25	OFF	OFF	ON	ON	ON	Intermittent 970 Hz, 1/2s On /1/2s Off, 3 tones per 4 cycles	25	ISO 8201 Low Frequency BS5839 Part 1, 1988	14
26	OFF	OFF	ON	OFF	ON	Intermittent 2850 Hz, 1/2s On /1/2s Off, 3 per 4 cycles	26	ISO 8201 High Frequency	20
27	OFF	OFF	ON	ON	OFF	Continuous at 4 kHz	27		35
28	OFF	OFF	ON	OFF	OFF	Alternating Tones 800/970 Hz, 1/4s/1/4s	10	FP1063.1 -telecom	17

10.3.3. Installation steps

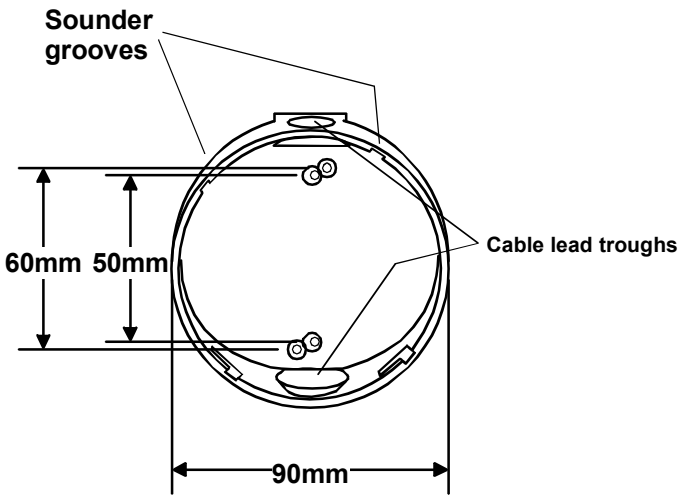

Picture 10-11

The surface mounting box, which ingress protection is IP65.

The sounder is mounted onto the surface-mounting box.

1. Use 4-mm ∅ screws.
2. Drill 2 holes vertically (if the cable entry hole is wanted down or up) on a distance of 50 mm or 60 mm for the screws or screw plugs.
3. Mount the box with 2 screws.
4. Cut a cable entry hole to the box.
5. Ensure glands confirm to the ingress protection.
6. Drag the cable(s) through the box cable entry.
7. Cut the cable(s) suitable for the sounder.
8. Peal the cable.
9. Peal the conductors so that there is no unisolated conductor outside the terminals.
10. Connect the conductors to the sounder terminals. Note! The polarity of the terminals.
11. Mount the sounder onto the box by inserting the sounder notches into the grooves of the base. Now twist the sounder clockwise

10.3.4. Connection

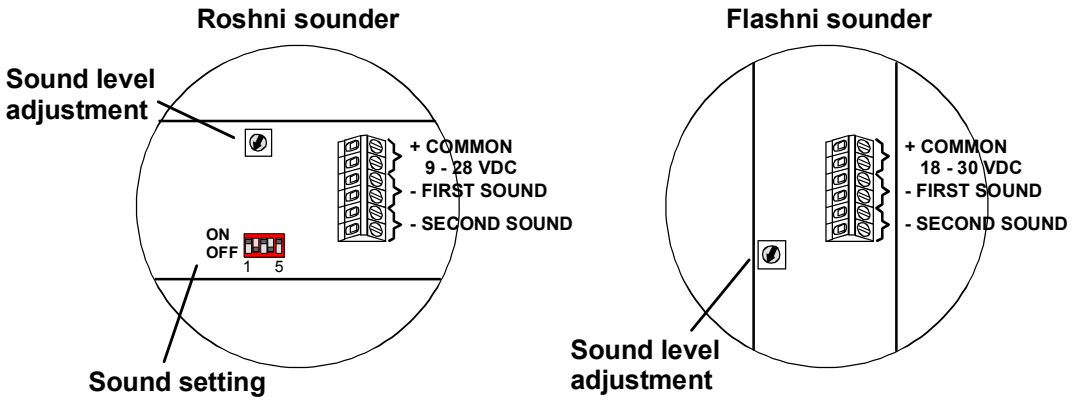

Picture 10-12

The sounder has 2 different sound outputs. When connected to the BELL / EXT outputs of the motherboard or to the Bell module CHQ-B only 1 of the sounds can be used.

Connection to BELL / EXT outputs on the ProDex-MABO motherboard.

- Sound 1: connect to BELL+/EXT to + and BELL-/EXT- to – (First sound).
- Sound 2: connect to BELL+/EXT+ to + and BELL-/EXT- to – (Second sound)
- The end of line resistor 1kΩ / 1W is connected at the last sounder on the line.

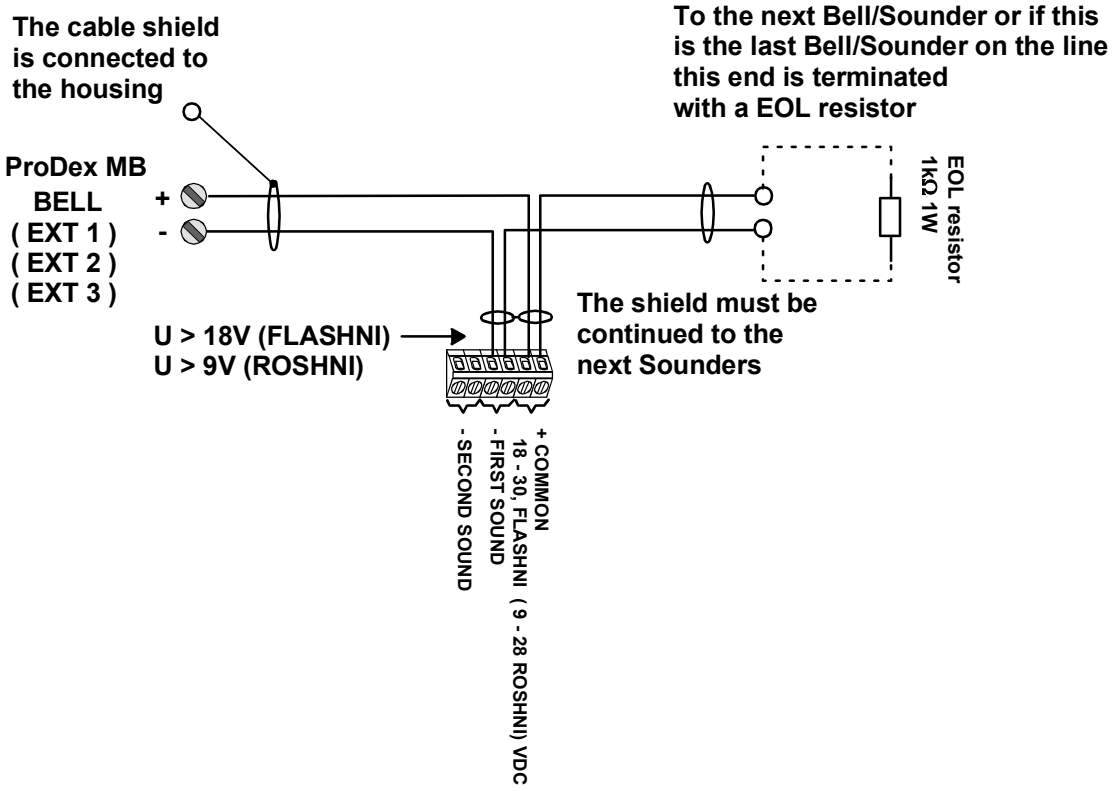

Picture 10-13

If you connect the bell to the CHQ-B bell module the connection is:

- Sound 1: connect to B1+/B2+ to + and BC1/BC2 to – (First sound).
- Sound 2: connect to B1+/B2+ to + and BC1/BC2 to – (Second sound)
- The end of line resistor 1kΩ / 1W is connected at the last bell on the line.

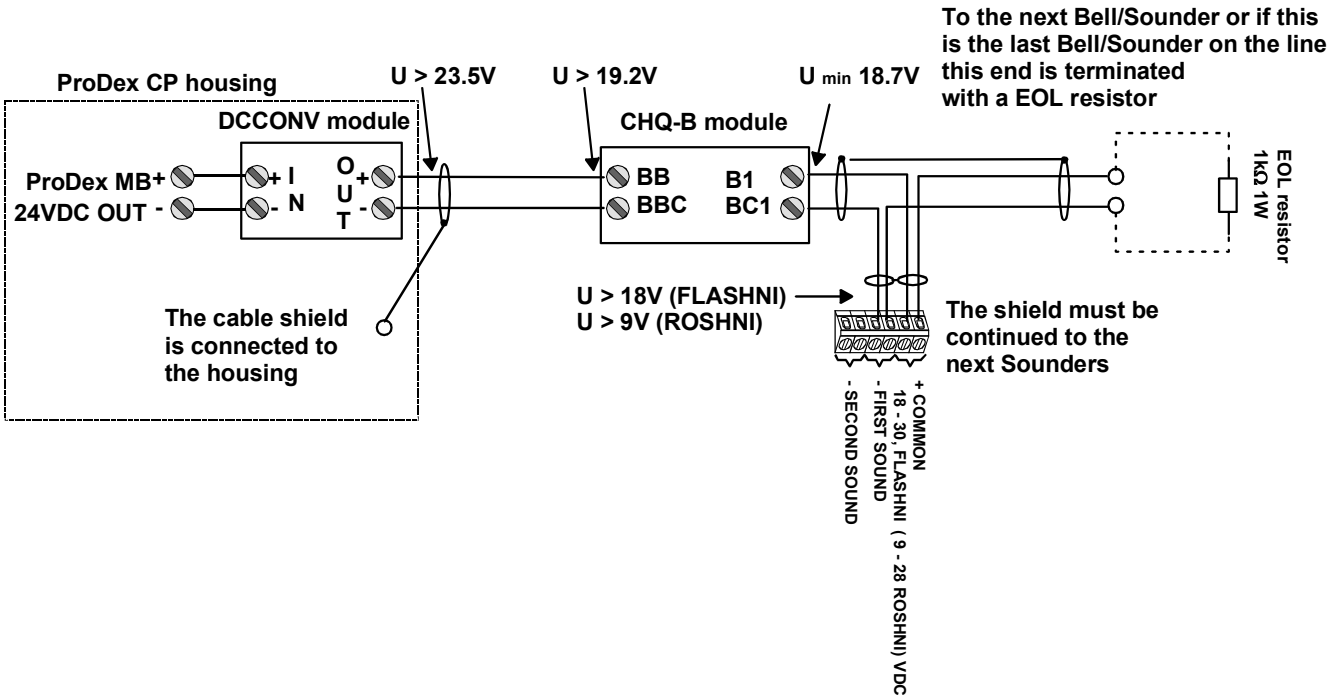

Picture 10-14

10.4. Cable dimensioning



All calculations have been made with MHS-type cable, conductor pair resistance 188 Ω / km.

All fire alarm devices needs at least 2 conductors for power, depending on cable distance and the count of devices.



The current consumption of the EOL device must always be calculated into the consumption.

10.4.1. Devices connected to the control panel



The minimum output voltage from the control panel bell/ext output is 19.2V. This voltage level is when the control panel is powered by battery only and the battery voltage is at its lowest possible level.

1. For the MSB-Bell this means a loss of 3.2V is acceptable (minimum operating voltage 16V).
2. For the Flashni sounder this means a loss of 1.2V is acceptable (minimum operating voltage 18V).
3. For the Roshni sounder this means a loss of 9.2V is acceptable (minimum operating voltage 9V).

The formula is:

$$l\,[m] = (1000 / (188 / c)) * U_{min} / ((I_{devtype\ 1} * n1) + (I_{devtype\ 2} * n2) + (I_{devtype\ 3} * n3) + I_{EOL})$$

Where:
l is the cable distance in meters to the most distant device.
c is the count of conductor pairs for the devices.
U min is the minimum operating voltage of the devices
I devtype [A] is the current consumption of the each different devicetype on the line.
n is the count of each device type connected to the cable.
I EOL is the current consumption of the EOL device, which is 20mA.

E.g.

Your maximum cable distance with one MSB BELL and one conductor pair:

Imax = 28 mA
l = 1000m / 188Ω* 3.2/(0.028A + 0.02A)
l = 354m

With the cable type MHS 1x4 (**2 pairs for voltage**):
You can connect **one MSB Bell** at a maximum cable distance of 708m.
If you have **4 MSB Bells** you can connect them at a maximum cable distance of 258m.

E.g.

Your maximum cable distance with one Flashni sounder and one conductor pair:

Imax = 68 mA
l = 1000m / 188Ω* 1.2/(0.068A + 0.02A)
l = 72m

With the cable type MHS 1x4 (**2 pairs for volt**age):
You can connect **one Flashni sounder** at a maximum cable distance of 144m.
If you have **4 Flashni sounders** you can connect them at a maximum cable distance of 44m.

E.g.

Your maximum cable distance with one Roshni sounder and one conductor pair:

Imax = 33 mA
l = 1000m / 188Ω* 9.2/(0.033A+ 0.02A)
l = 923m

With the cable type MHS 1x4 (**2 pairs for voltage**):
You can connect **one Roshni sounder** at a maximum cable distance of 1846m.
If you have **4 Roshni sounders** you can connect them at a maximum cable distance of 644m.

10.4.2. Devices connected to the CHQ-B bell module

The voltage to the CHQ-B Bell module must be between 19.2 – 30 VDC.

There are 2 ways to supply power to the module:

- DCCONV module (inside control panel housing).
- Separate 24VDC power supply with backup.

Separate 24VDC power supply with backup:

The power supply can also come from a separate 24 VDC power supply. The separate power supply must have battery backup in case of a power failure.



The voltage from this separate power supply must never go below 19.2V

A calculation with a separate 24VDC power supply is not shown in this instruction.

DCCONV module:

The module can be supplied with power from the control panel 24 VDC outputs, using the DCCONV unit. The minimum output voltage from the DCCONV power output is 23.5V. This voltage level is when the control panel is powered by battery only and the battery voltage is at its lowest possible level. Data regarding DCDOWN see chapter DC converter, DCCONV.

Calculating the distance from the power supply to the CHQ-B Bell module:

You can loose 4.3V to the cable between the DCCONV module and the CHQ-B module (23.5 – 19.2).

The maximum cable distance calculation depends on the used bell or sounder type.

The formula is:

$$l\,[m] = (1000 / (188 / c)) * 4.3 / (I_{total} + I_{EOL})$$

Where:
l is the maximum cable distance in meters to the Bell module.
c is the count of conductor pairs for the power supply of the bells.
I total is the total maximum current consumption of the bells or sounders connected to the cable.
I EOL is the current consumption of the EOL device, which is 20mA.

E.g.

You have a MSB-6B/24 Bell Imax (MSB)= 28 mA
The current consumption of the Bell module CHQ-B which is less then 1 mA can be ignored.

Your maximum cable distance between the ProDex MB motherboard and the CHQ-B module with one conductor pair for voltage supply and one MSB-6B/24 Bell connected to the module is:
l = (1000m / 188Ω)* 4.3V/ (0.0.28A+0.02A)
l = 476m

With the cable type MHS 1x4 when using 2 pairs for voltage you can connect **one Bell module (CHQ-B) with one MSB-6B/24 Bell connected to it** at a maximum cable distance of 952m.
If you have **4 MSB Bells** connected to the Bell module your maximum cable distance is 238m

E.g.

Your maximum cable distance between the ProDex MB motherboard and the CHQ-B module with **one conductor pai**r for voltage supply and one Flashni sounder connected to the module is:
Imax (Flashni)= 68 mA
The current consumption of the Bell module CHQ-B which is less then 1 mA can be ignored.

l = (1000m / 188Ω)* 4.3V/ (0.0.68A + 0.02A)
l = 260m

With the cable type MHS 1x4 when using 2 pairs for voltage you can connect **one Bell module (CHQ-B) with one Flashni sounder connected to it** at a maximum cable distance of 150m.
If you have **4 Flashni sounders** connected to the Bell module your maximum cable distance is 37m

E.g.

Your maximum cable distance between the ProDex MB motherboard and the CHQ-B module with **one conductor pai**r for voltage supply and one Roshni sounder connected to the module is:
Imax (Roshni)= 33 mA
The current consumption of the Bell module CHQ-B which is less then 1 mA can be ignored.

l = (1000m / 188Ω)* 4.3V/ (0.0.33A + 0.02A)
l = 130m

With the cable type MHS 1x4 when using 2 pairs for voltage you can connect **one Bell module (CHQ-B) with one Roshni sounder connected to it** at a maximum cable distance of 260m.
If you have **4 Roshni sounders** connected to the Bell module your maximum cable distance is 65m

Calculating the distance between the CHQ-B Bell module and the sounder device:

When the input voltage to the CHQ-B module is 19.2V (minimum), the Bell line output voltage is 18.7V.

1. For the MSB-Bell this means a loss of 2.7V is acceptable (minimum operating voltage 16V).
2. For the Flashni sounder this means a loss of 0.7V is acceptable (minimum operating voltage 18V).
3. For the Roshni sounder this means a loss of 9.7V is acceptable (minimum operating voltage 9V).

The formula is:

$$l\,[m] = (1000 / (188 / c)) * 1.3 / ((I_{devtype1} * n1) + (I_{devtype2} * n2) + (I_{devtype3} * n3) + I_{EOL})$$

Where:
l is the maximum cable distance in meters to the Bell module.
c is the count of conductor pairs for the power supply of the devices.
I devtype [A] is the current consumption of the each different device type on the line.
n is the count of each device type connected to the cable.
I EOL is the current consumption of the EOL device, which is 20mA.

E.g.

Your maximum cable distance between the CHQ-B module and the last MSB-Bell **with one conductor pair** for voltage supply to the CHQ-B module and one MSB-6B/24 Bell connected to the module is:

Imax = 28 mA.
l = (1000m / 188Ω)* 2.7V / (0.028A + 0.02A)
l = 300m

With the cable type MHS 1x4 (2 pairs for voltage):
With **one MSB Bell** your maximum cable distance between the bell module and the bell is 600m.
If you have **4 MSB Bells** you can connect them at a maximum cable distance of 150m.

E.g.

Your maximum cable distance between the CHQ-B module and last Flashni sounder with **one conductor pair** for voltage supply and one Flashni sounder connected to the module is:
Imax (Flashni)= 68 mA

l = (1000m / 188Ω)* 0.7V/ (0.0.68A + 0.02A)
l = 40m

With the cable type MHS 1x4 when using 2 pairs for voltage you can connect **one Bell module (CHQ-B) with one Flashni sounder connected to it** at a maximum cable distance of 80m.
If you have **4 Flashni sounders** connected to the Bell module your maximum cable distance is 20m

E.g.

Your maximum cable distance between the CHQ-B module and the last Roshni sounder with **one conductor pair** for voltage supply and one Roshni sounder connected to the module is:
Imax (Roshni)= 33 mA
The current consumption of the Bell module CHQ-B which is less then 1 mA can be ignored.

l = (1000m / 188Ω)* 9.7V/ (0.0.33A + 0.02A)
l = 970m

With the cable type MHS 1x4 when using 2 pairs for voltage you can connect **one Bell module (CHQ-B) with one Roshni sounder connected to it** at a maximum cable distance of 1940m.
If you have **4 Roshni sounders** connected to the Bell module your maximum cable distance is 485m

11. Connection of routing equipment

11.1. Inside the control panel housing

At the moment Oy HedPro Security Ab doesn't guarantee EMC compliance if any routing device is installed inside the housing.

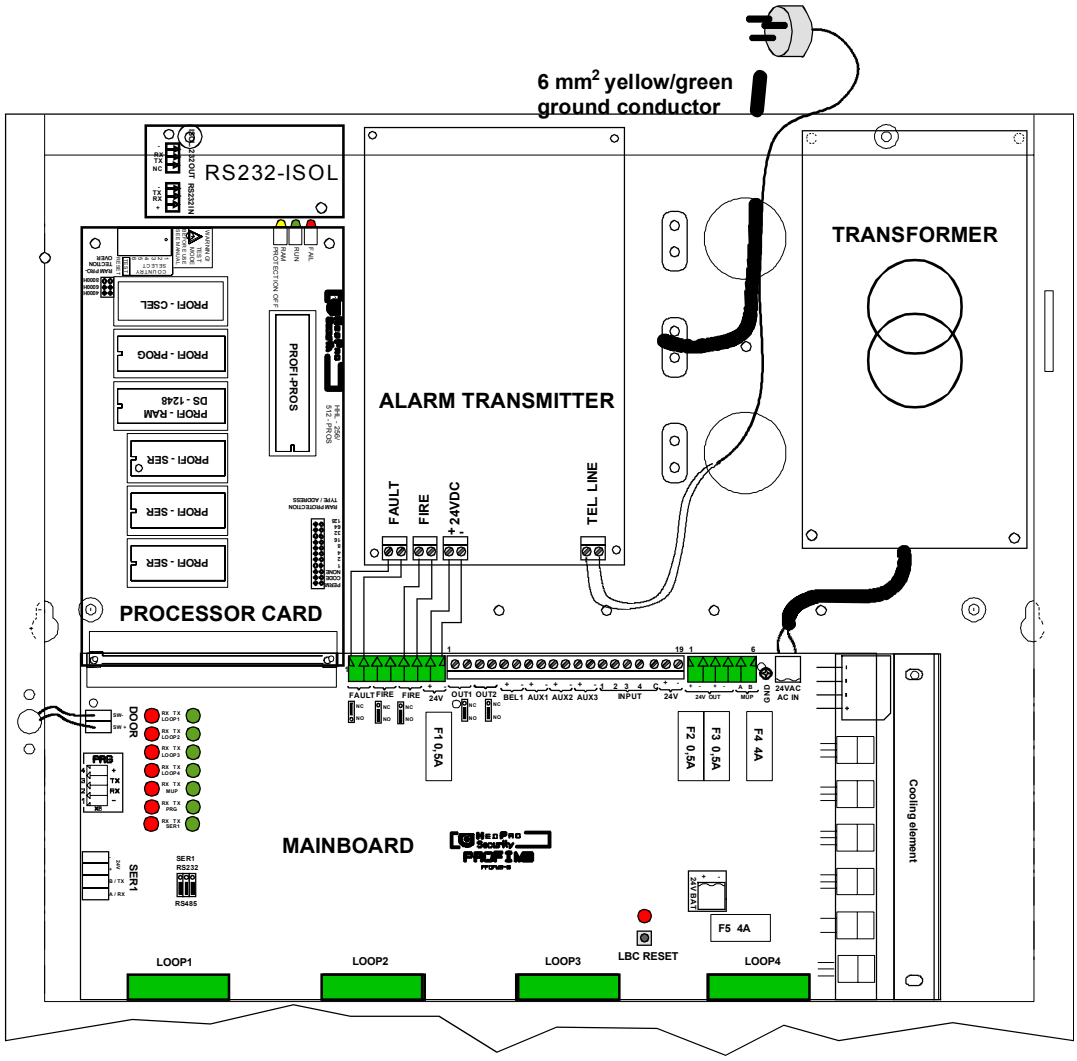

Picture 11-1

If you choose to place the routing device inside the housing, there is a reserved place for a Euro PCB, see picture.

11.1.1. Connection

Follow the routing device manufacturer instructions when connecting the device.

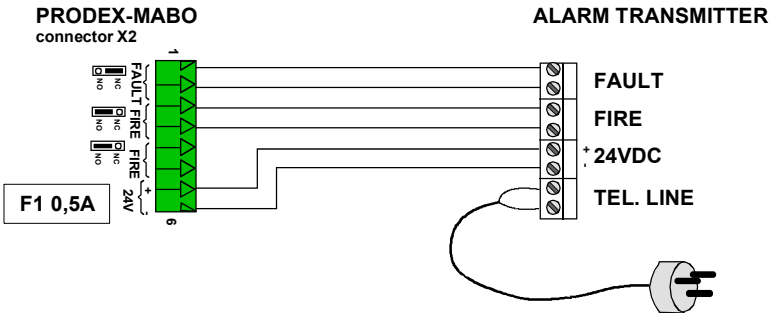

Picture 11-2

ProDex-MABO connector X2	Function	Alarm transmitter
1	Fault relay	**FAULT INPUT**
2	Fault relay	
3	Fire relay	**FIRE INPUT**
4	Fire relay	
7	+ 24 VDC	**POWER SUPPLY +**
8	-	**POWER SUPPLY -**

11.2. Outside the control panel housing

When using a routing device which is located outside the control panel housing you can make the same connection as when the routing device is located inside the control panel housing.

If you want that the line between the control panel and the routing device is monitored you must use the EXT-outputs with the ProDex-OPCO card.

You must use shielded cable for the connection. The cable shield must be connected to the control panel housing.
The ProDex-OPCO card must be located inside the transmitter housing.

11.2.1. Connection using Prodex-OPCO

Follow the routing device manufacturer instructions when connecting the device.

Before connecting the routing device cable conductors to the control panel you must measure the isolation resistance of all cable conductors.

The measurement is made as explained and shown in chapter Procedures before power on.

You must program the output used for fire alarm as type EN54 E, and the output used for fault as type EN54 J.

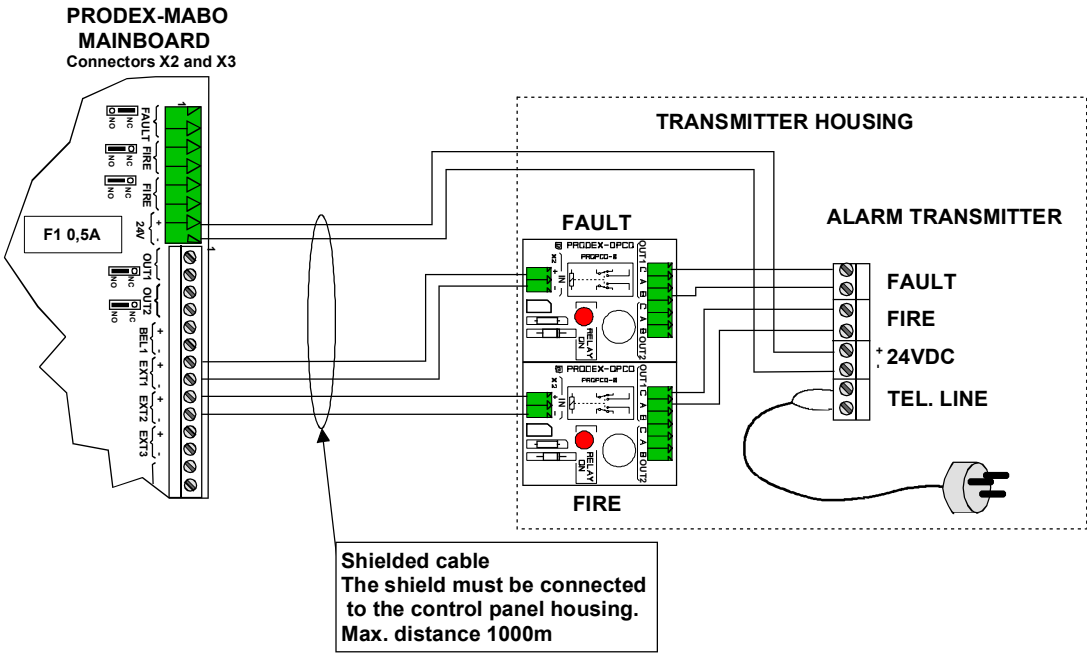

Picture 11-3

ProDex-MABO connector	Function	ProDex-OPCO	**ALARM TRANSMITTER**
X3, 1	Fault output (programmed)	IN +	
X3, 2	Fault output (programmed)	IN -	
X3, 3	Fire output	IN +	
X3, 4	Fire output	IN -	
X2, 7	+ 24 VDC		**POWER SUPPLY +**
X2, 8	-		**POWER SUPPLY -**
	Common	**OUT C**	**FAULT INPUT**
	NC output	**OUT B**	**FAULT INPUT**
	Common	**OUT C**	**FIRE INPUT**
	NO output	**OUT A**	**FIRE INPUT**

More instructions regarding the ProDex-OPCO are found in chapter Prodex-OPCO card.

12. Other connectionboards

12.1. 8 relay card, Extout-8

13. Procedures before power on

13.1. Measuring the ground resistance

The ground conductor from the power central ground terminal is connected to the shield connection bar of the control panel. The control panel mother board ProDex MB is grounded from the screw beside the ACIN connector.

The connection of this conductor and the resistance from the shield connection bar must be checked to make sure that it's ok (so that the control panel can detect any ground failures in the system.

This ground measurement must be made from 2 separate power outlets.

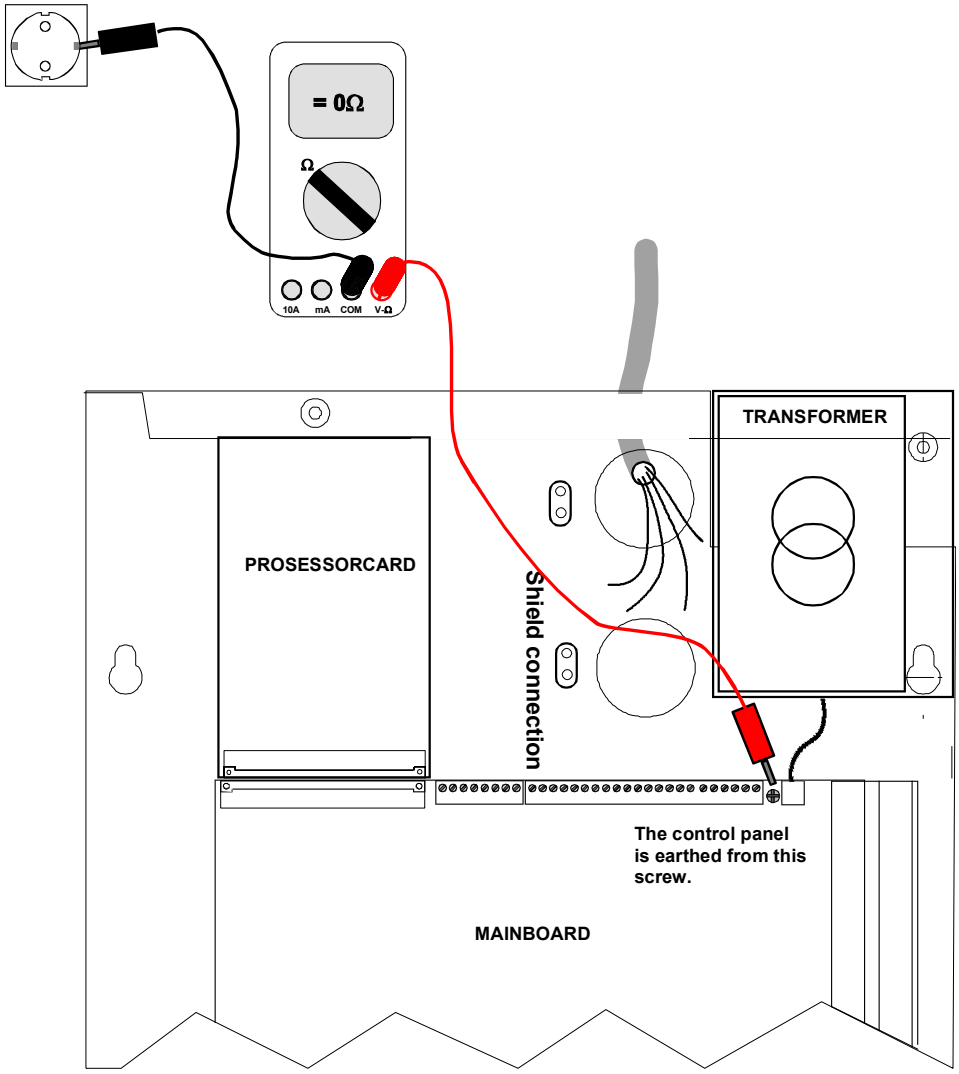

Picture 13-1

The resistance must be less then 1Ω

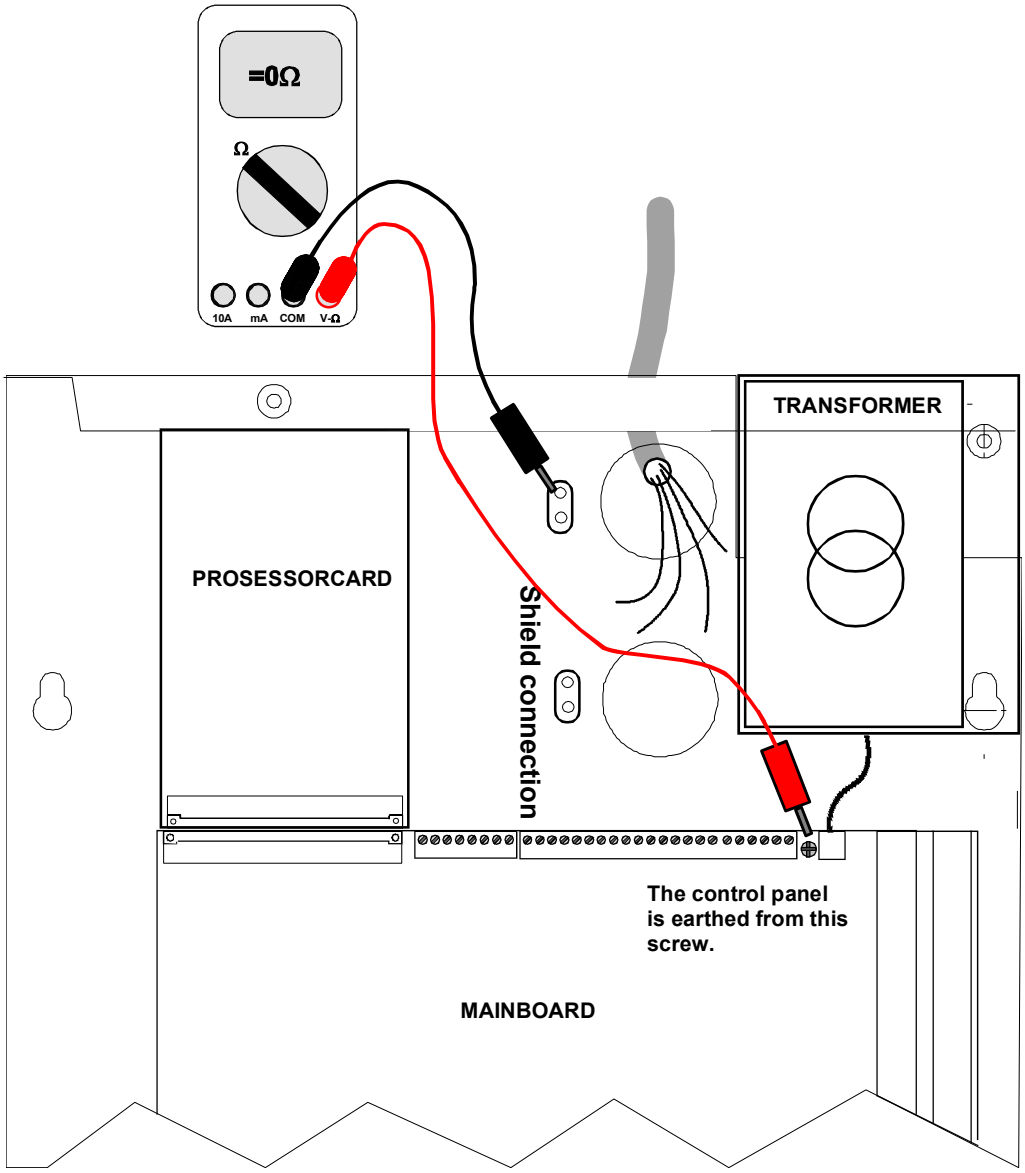

Picture 13-2

13.2. Measuring the isolation resistance

Before connecting any cable to the control panel make sure that the isolation resistance from any conductor in the cable or the cable shield to power mains ground or to the shield connection bar is greater then 1MΩ.

The isolation resistance between all cable terminals and the cable shields, cable shield connection terminal or the mains ground connection bar must be greater then 1MΩ

Make sure that the resistance between the shield connection bar and the motherboard grounding screw is zero ohms before proceeding with this measurement.

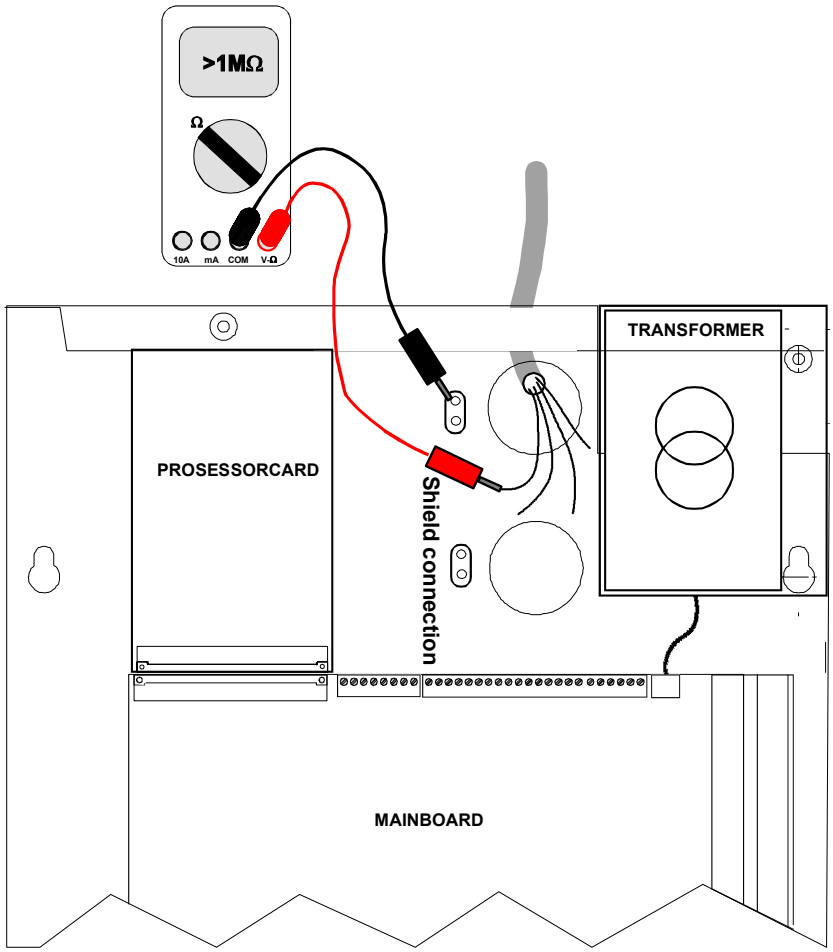

Picture 13-3

14. Technical Data

14.1. Analog loop points

14.1.1. Sensors

Specifications:	ACA-E	AIE-E	ALG-E	ATG-E
Type / Use	Heat + optical smoke	Ionisation smoke	Optical smoke	Heat
Operating voltage (high) **[V]**	24 – 40	24 – 40	24 – 40	24 – 40
Quiescent current **[µA]**	500	400	440	400
Maximum current **[µA]**	500	400	440	400
Current consumption units **[50µA]**	10	8	9	8
Alarm led current **[µA]**	8800	8800	8800	8800
Operating temperature range **[°C]**	-10 - +50	-10 - +50	-10 - +50	-10 - +50
Maximum humidity (non condensing at 40°C)	95% RH	95% RH	95% RH	95% RH
Dimensions **[mm]**	100 x 56 [1)]	100 x 54 [1)]	100 x 46 [1)]	100 x 40 [1)]
Compatible Bases	YBN-R/3, CHQ-BS, YBO-R/SCI	YBN-R/3, CHQ-BS, YBO-R/SCI	YBN-R/3, CHQ-BS, YBO-R/SCI	YBN-R/3, CHQ-BS, YBO-R/SCI
Weight (including base) **[g]**	100 (145)	115 (160)	95 (140)	90 (135)

14.1.2. Callpoints

Specifications:	MCP-E
Type / Use	Call point unit
Operating voltage (high) **[V]**	24 – 40
Quiescent current **[µA]**	280
Maximum current **[µA]**	4100
Current consumption units **[50µA]**	82
Operating temperature range **[°C]**	-10 - +50
Maximum humidity (non condensing at 40°C)	95% RH
Dimensions **[mm]**	88 x 88 x 20 (88 x 88 x 32) [2)]
Weight (including base) **[g]**	100 (145)

14.1.3. Bases

Specifications:	YBN-R/3	YBO-R/SCI	CHQ-BS
Type / Use	Normal base	Short circuit isolator base	Sounder base (can also be used as standalone)
Operating voltage (high) **[V]**	24 – 40	24 – 40	24 – 40
Quiescent current **[µA]**	-	50	250
Maximum current **[µA]**	-	50	Depending on sound level; (85 dB = 3000) (95 dB = 11000)
Current consumption units **[50µA]**	-	1	60 @ 85dB 220 @ 95dB
Operating temperature range **[°C]**	-10 - +50	-10 - +50	-10 - +50
Maximum humidity (non condensing at 40°C)	95% RH	95% RH	95% RH
Dimensions [mm]	100 x 8 [1)]	100 x 13 [1)]	115 x 27 [1)]
Base Fixing Centres **[mm]**	48 through to 74	48 through to 74	48 through to 74
Weight **[g]**	45	85	200

14.1.4. Modules

Specifications:	CHQ-Z	CHQ-MZ	CHQ-R	CHQ-B	CHQ-S	CHQ-SIO
Type / Use	Dual conventional line controller	Conventional line ctrl (max. 6 sensors)	Dual Relay module	Bell module	Switch module (2 inputs)	Input / Output module (1 In / 1 Out)
Use	Allows 2 conventional lines (<=30 points / line) (total max 32 points) to be connected to an analogue loop at one address	Interface to allow conventional points to be connected to an analogue loop at one address. 6 sensors + call points to a max of 32 points can be connected	Module with 2 voltage free contact (relay) outputs, 1 external input	Module for 2x external bell connections	Unit for monitoring 2 external inputs (NC or NO)	One voltage free contact (relay) output, 1 external input
Operating voltage (high)**[V]**	24 – 40	24 – 40	24 – 40	24 – 40	24 – 40	24 – 40
Quiescent current **[µA]**	350	310	350	340	330 (if NC + 85µA / input)	350
Maximum current **[µA]**	1000	62900	350	740	4300	350
Current consumption units **[50µA]**	20	1258	7	16	86	7
Max capacitance **[µF]**	0.3	0.3		0.3		
Max resistance **[Ω]**	50	50				
EOL	EOL 24V 0.4W zener	EOL 24V 0.4W zener	Input: 10kΩ (0.25W resistor).	1kΩ 2W resistor	-	Input: 10 kΩ (0.25W resistor).
External power	20 –28.8 VDC Quiescent 700µA; max 70 mA.	-	-	19.2-30 VDC	-	
Other	Open collector output 30 VDC, 30 mA	Open collector output 5 mA	Contact rating 30V, 1A	Max. current/line 1A	Inputs can be set NC / NO	Contact rating: 250 VAC / 1A (resistive), 48 VDC / 2A

						(resistive)
Operating temperature range **[°C]**	-10 - +50	-10 - +50	-10 - +50	-10 - +50	-10 - +50	-10 - +50
Maximum humidity (non condensing at 40°C)	95% RH	95% RH	95% RH	95% RH	95% RH	95% RH
Dimensions (OEM unit)**[mm]**	(185 x 97 x 30) 235 x 160 x 92	(147 x 90 x 23) 160 x 110 x 92	(147 x 90 x 23) 160 x 110 x 92	(185 x 97x 30) 235 x 160 x 92	(147 x 90 x 23) 160 x 110 x 92	147 x 90 x 23 160 x 110 x 92
Weight (OEM unit) **[g]**	(120), 550	(75), 120	(50), 120	(120), 550	(75), 120	(85), 120

(1) diameter x height [**d** x **h**]
(2) length x width x height [**l** x **w** x **h**]

14.2. Conventional loop points

14.2.1. Sensors

Specifications:	SLR-E	SLK-EN	SIJ-E	DCD-1E	DCD-R1E	DFJ-60E	DFJ-90E	DFG-60E
Operating voltage [V]	15 – 30	15 – 30	15 – 30	15 – 30	15 – 30	15 – 30	15 – 30	15 – 30
Standby current [µA]	35	?	35	35	35	35	35	0
Maximum current [mA]	40	?	40	40	40	40	40	50
Operating temperature range [°C]	-10 - +50	-10 - +50	-10 - +50	-10 - +50	-10 - +50	-10 - +50	-10 - +50	-30 - +60
Maximum humidity (non condensing at 40°C)	95% RH	95% RH	95% RH	95% RH	95% RH	95% RH	95% RH	Waterpro of, IP67
Dimensions [mm]	100 x 46 [1)]	100 x 54 [1)]	100 x 46 [1)]	100 x 46 [1)]	100 x 46 [1)]	100 x 46 [1)]	100 x 46 [1)]	98 x 45 [1)]
Compatible Bases	YBN-R/4, YBO-R/5	YBN-R/4, YBO-R/5	YBN-R/4, YBO-R/5	YBN-R/4, YBO-R/5	YBN-R/4, YBO-R/5	YBN-R/4, YBO-R/5	YBN-R/4, YBO-R/5	No base needed.
Base Fixing Centres [mm]	48 – 74	48 – 74	48 – 74	48 – 74	48 – 74	48 – 74	48 – 74	70
Weight (including base) [g]	95 (140)	115 (160)	80 (125)	95 (140)	95 (140)	95 (140)	95 (140)	80

14.2.2. Callpoints

Specifications:	KAC/G/HE
Operating voltage [V]	12 – 30
Standby current [µA]	0
Maximum current [mA]	47
Operating temperature range [°C]	-10 - +50
Maximum humidity (non condensing at	95% RH

40°C)	
Dimensions [mm] L x W x H	Flush unit: 88 x 88 x 20 Surface box: 88 x 88 x 32
Weight [g]	Flush unit: 100 Surface box: 80

14.2.3. Bases

Specifications:	YBN-R/4	YBO-R/5	YBF-RL/4H5
Operating voltage [V]	15 – 30	15 – 30	15 – 30
Standby current [µA]	0	0	0
Maximum current [mA]			
Operating temperature range [°C]	-10 - +50	-10 - +50	-10 - +50
Maximum humidity (non condensing at 40°C)	95% RH	95% RH	95% RH
Dimensions [mm]	100 x 8 [1)]	100 x 8 [1)]	100 x 8 [1)]

(1) diameter x height [**d** x **h**]

14.3. ProDex products

14.3.1. The control panel

	prodex-MB
Feature	
Maximum loop cards (analog + conventional)	4
Maximum addresses	512
Maximum zones	128
Power transformer	29VAC / 150VA
Transformer AC input minimum (230V - 15%) [VAC]	195.5
Transformer AC input maximum (230V + 10%) [VAC]	253
Power consumption [mA]:	
Minimum (AC off)	50
Maximum (normal/alarm state)	90
Power outputs:	
Minimum voltage [V]	19.6
Maximum voltage [V]	28.5
+24VDC F2 [A]	1.0
+24VDC F3 [A]	1.0
+24VDC F1 [A] (output for Alarm transmitter)	0.5
Output ripple normal [*mV pp*]	100
Output ripple maximum [*V pp*] (mains input 230 - 15% VAC)	1.5
Maximum power output [A] consumtion (F1+F2+F3):	1.0
EN54 outputs (short and open circuit monitored): Types: C, E, G and J	
BELL / EXT 1 [A]	0.3
BELL / EXT 2 [A]	0.3
BELL / EXT 3 [A]	0.3
BELL / EXT 4 [A]	0.3
Minimum voltage [V]	19.2
Maximum voltage [V]	28.5
Maximum power consumtion of F1+F2+F3+B/E1+B/E2+B/E3+B/E4 [A]	1.5
Loopcards:	
Loop 1 [mA]	700
Loop 2 [mA]	700
Loop 3 [mA]	700
Loop 4 [mA]	700
Maximum power consumption of all Loops [A]	2
Maximum power consumtion of F1+F2+F3 +BELL1+EXT1..EXT3+LOOP1..LOOP4 [A]	2.5
Batteries / 12V,17Ah [Ah]:	
Minimum capacity (2x)	17
Maximum capacity (8x)	68
Battery minimum voltage [V]:	21.4
Battery charge current [A]:	
(alarm state, AC input 195.5V)	1.0
Normal / Maximum (normal state)	2.5
Total current consumption (maximum)[A]:	
Normal state, AC ON	3.5
Normal state, AC OFF	0.925
Alarm state, AC ON	5.0
Alarm state, AC OFF	2.5
Relay outputs (relay coil is monitored):	2 x FIRE, 1 x FAULT
Optional relay outputs:	2
Inputs (Normally open)	4
User panels, RS485	8
PRG, PC-connection RS232	Standard
SER1, Programmable RS232 / 485	Standard

Picture 14-1

1) Depends on how many loop cards there is attached to the control panel (max. 4)

2) Depends on how many loop cards there is attached to the control panel.
In the analog system you can connect 127 addresses / analog loop card. (4 analog loop cards max. 508). With the conventional system you can connect 256 points / loop card. (2 loop cards = 512 points). You can also use 4 conventional loop cards when you remember that you must not exceed 512 points.

3) Maximum count of User panels

14.3.2. Analog loop card (Prodex-HOAN)

	prodex-HOAN
Feature	
Points:	
Maximum without using short circuit isolators	32
Maximum when using isolators	127
Current consumption from mother board [mA]:	
Minimum (only card)	40
Maximum, (alarm state) (AC off, depends on loop devices) device consumption x2	700
Loop output voltage [V]:	
Low minimum	29
Low maximum	31
High minimum	37
High maximum	39
Loop current consumption [mA]:	
Maximum (normal state)	85
Maximum (alarm state)	350
Loop maximum resistance [Ω] (to any point on the loop)	74
Loop maximum capacitance [µF]	0,7
Size [l x w x h] [mm]:	145x67x15

Picture 14-2

14.3.3. Conventional line card (Prodex-HOCO)

	prodex-HOCO
Feature	
Lines	8
Points:	
Maximum to 1 line	32
Maximum point count (8 lines)	256
End of Line device (EOL)	zener diode 24V/1.3W
Current consumption from mother board [mA]:	
Minimum (only card)	40
Maximum (4 Alarms on all 8 lines)	700
Loop output voltage [V]:	
Minimum	20
Maximum	30
Line current consumption [mA / Ω]:	
Normal state:	
Minimum	0 / infinite
Maximum	1,6 / 16k
Alarm state:	
Minimum	26 / 610
Maximum	80 / 100
Line maximum resistance [Ω]	74
Loop maximum capacitance [μF]	0,7
Size [l x w x h] [mm]:	145x67x15

Picture 14-3

14.3.4. The user panel, Prodex-MUP

	prodex-MUP
Feature	
Operating voltage [V]:	
Minimum	15
Nominal	24
Maximum	40
Current consumption [mA]:	
Minimum (backlight off, 24V)	45
Maximum (backlight on, 15V)	220
Cabling:	
Maximum distance [m]	500
Maximum capacitance [μF]	0,15
Connection:	RS485/RS232
Size [l x w x h] [mm]:	510x380x70

Picture 14-4

14.3.5. DC Converter, DCCONV

Type	DC Converter
Input voltage **[VDC]**	19 – 30
Output voltage **[VDC]**	23.5 – 29.5
Maximum ripple **[V]**	0.5
Current consumption **[mA]**	20
Efficiency coefficient	1.4
Dimensions **[l x w x h] [mm]**	55 x 57 x 25
Accessories	4 x plastic clamp

14.3.6. Output control, Prodex-OPCO

Type	Prodex-OPCO
Current consumption [mA]	10
Input [VDC]	18 – 28.5
Output	2 Potential free relays (configurable NC / NO)
Dimensions	38 x 48 x 20
Accessories	4 Plastic snap-in supports

15. Calculation Examples

15.1. Calculation of battery capacity

According to EN54 specifications, the system must be fully functional when powered by battery only, for 72h normal operation and 0.5h of maximum power output.

The system must be capable of charging 80% of the battery capacity in a period of 24h.



The control panel battery charge current is 2.5A.
The maximum battery capacity of the system can be 68 Ah.
This equals 8 x 12V/17 Ah batteries.

During the power fail the system must be fully functional for 72.5h. This period consists of 72h normal operation and 0.5h of maximum output current.

See Technical Data for current consumptions.

The total battery capacity need is calculated:

Total needed battery capacity 72.5h = 0.5h maximum current capacity need + 72h quiescent current capacity need

15.1.1. Alarm state current

The **maximum current** capacity is calculated (the system is in alarm state):

- Add the **maximum** current consumption values for the control panel.
- Add the **maximum** current consumption values for the user panels.
- Add the **maximum** current consumption for the HOCO-loop cards.
- Add the **NORMAL** current consumption for the HOAN-loop cards.
- Calculate the **maximum** value of all points connected to the analog loops. (sensors, base sounders, isolators, other modules).
- **Multiply** the value for all **devices connected to the analog loop** by **2**. (The battery voltage is switched up suitable for the analog loop)
- Add this value to the sum.
- Add the **maximum** current consumptions of the alarm transmitter.
- Add the **maximum** current consumptions of all other cards, modules etc.
- Add the **maximum** current consumptions of the fire bells, connected directly to the control panel (BELL / EXT 1-4).
- **Multiply** the maximum current consumption of all fire bells, connected to the CHQ-B module by **1.4**. (When using the DCCONV-module for power supply).
- Add this value to the sum.
- **Multiply** the maximum current consumption of each 24VDC powered CHQ-Z module by **1.4**. (When using the DCCONV-module).
- Add this value to the sum.
- Add **20mA** for each line connected to BELL / EXT outputs, which is terminated with the EOL device.
- Add **20mA** for each sounder line connected to CHQ-B modules, which is terminated with the EOL device.
- This value is the **maximum** current consumption for 1h = Ah.
- This value is multiplied with the maximum power output time 0.5h.

The formula for this calculation:
where:
c = count of devices of a certain type
n = different points in the loop
nn = count of bell lines, connected to BELL/EXT and CHQ-B modules.

0.5h maximum current capacity need = 0.5 * (control panel + (c * user panels) + (c * HOAN loops) + (c * other module (1)) + (c * other module (x)) + (2 * (c * analog point type 1 + c * analog point type n + c * analog base type 1 + c * analog base type n + c * analog module type n)) + alarm transmitter + (c * fire bell connected to BELL/EXT) + (1.4 * (c * fire bell connected to CHQ-B)) + (1.4 * (c * CHQ-Z module pow)) + (nn * Bell line @20mA))

15.1.2. Normal state current

The **normal current** consumption is based on **quiescent currents**.

- Add the **minimum** current consumption value for the control panel.
- Add the **minimum** current consumption values for the user panels.
- Add the **minimum** current consumption values for the HOAN-loop cards.
- Add the **minimum** current consumption values for the HOCO-loop cards
- Add the **minimum** current consumptions of the alarm transmitter.
- Add the **minimum** current consumptions of all other cards, modules etc.
- The **quiescent** power consumptions of all external devices. (All **analog** loop points) is multiplied with **2** (The battery voltage is switched up suitable for the analog loop).
- Add this value to the sum.
- **Multiply** the quiescent current consumption of each 24VDC powered CHQ-Z module by **1.4**. (When using the DCCONV-module).
- Add this value to the sum.
- This value is the **normal** current consumption for 1h = Ah.
- This value has to be multiplied with the normal operation time 72h.

The formula for this calculation:
where:
c = count of devices of a certain type
n = different points in the loop

72h normal state current capacity need = 72 * (control panel + (c * user panels) + (c * HOAN loops) + (c * HOCO cards) + alarm transmitter + (c * other module (1)) + (c * other module (x)) + (2 * (c * analog point type 1 + c * analog point type n + c * analog base type 1 + c * analog base type n + c * analog module type n)) + (1.4 * (c * CHQ-Z module pow)))

E.g. we have:

- A control panel. The minimum consumption is 50 mA,
- 1 User panel.
- 1 HOAN-loop cards.
- An alarm transmitter. (30mA)
- 20 AIE-E (Ionisation smoke sensor).
- 20 ALG-E (Photoelectric smoke sensor).
- 10 ACA-E (Multi sensor).
- 5 ATG-E (Heat sensor).
- 2 YBO-R/SCI (Short circuit isolator mounting base).
- 10 CHQ-BS (mounting base with sounder). Sound level is set at 85 dB (3.0 mA alarm state current consumption).
- 43 YBN-R/3 (Mounting base).
- 4 Fire Bells.
- 2 Bell lines. (Connected to the ProDex MB)

The taken battery capacity when all devices in the system consume their quiescent current (for 72 hours):

72h current consumption = 72 * (50 + (1 * 45) + (1 * 40) + 30 + (2 * (20 * 0.44 + 20 * 0.4 + 10 * 0.5 + 5 * 0.4 + 2 * 0.05 + 10 * 0.25 + 43 * 0)))

= 15681.6 mAh = 15.68 Ah.

The taken battery capacity when all devices in the system consume their maximum current (for 0.5 hours):

0.5h maximum current consumption [mA]= 0.5 * (90 + (1 * 220) + (1 * 40) + 30 + (2 * (20 * 0.44 + 20 * 0.4 + 10 * 0.5 + 5 * 0.4 + 2 * 0.05 + 10 * 3.0 + 42 * 0)) + (4 * 25) + (2 * 20))

= 313.9 mAh = 0.32 Ah.

The total needed battery capacity is:

Total needed battery capacity 72.5h [Ah] = 0.32 + 15.68

= 17.00 Ah.

We choose to use **a 12V / 17 Ah battery type.** Because the system uses 24V **we need 2 of these 12V batteries.**

15.1.3. Conventional system

1 battery pair, 17Ah backup power

prodex -system battery backup calculations

Batteries:	2	Alarm state current [mA]:	2 500,00
Capacity /battery [Ah]:	17	Normal state current consumption [mA]:	218,75
Capacity [Ah]:	17,00		

	Count	Normal state [mA]	Total normal consumption for item [mA]	Alarm state [mA]	Total alarm consumption for item [mA]	Notes
CIE	1	50	50,00	90	90,00	
MUP	1	45	45,00	220	220,00	Backlight on
HOCO	2	40	80,00	40	80,00	Card + normal consumption for the points
Transmitter	1	30	30,00	30	30,00	
Lines	16	0	-	32	512,00	32mA @ 1 alarm / line
Bells	50	0	-	25	1 250,00	F1..F3+BELL1+ EXT1..3 < 1.5A
Bell lines	4	0	-	20	80,00	BELL/EXT 1-4
Total:			205,00		2 262,00	
Values must be <			218,75		2 500,00	

Results:
Normal state: Consumption OK

Alarm state: Consumption OK

Picture 15-1

2 battery pairs, 34Ah backup power

prodex -system battery backup calculations

Batteries:	4	Alarm state current [mA]:	2 500,00
Capacity /battery [Ah]:	17	Normal state current consumption [mA]:	454,86
Capacity [Ah]:	34,00		

	Count	Normal state [mA]	Total normal consumption for item [mA]	Alarm state [mA]	Total alarm consumption for item [mA]	Notes
CIE	1	50	50,00	90	90,00	
MUP	2	45	90,00	220	440,00	Backlight on
HOCO	4	40	160,00	40	160,00	Card + normal consumption for the points
Transmitter	1	30	30,00	30	30,00	
Lines	32	0	-	32	1 024,00	32mA @ 1 alarm / line
Bells	25	0	-	25	625,00	F1..F3+BELL1+ EXT1..3 < 1.5A
Bell lines	4	0	-	20	80,00	BELL/EXT 1-4
Total:			330,00		2 449,00	
Values must be <			454,86		2 500,00	

Results:
Normal state: Consumption OK

Alarm state: Consumption OK

Picture 15-2

15.1.4. Analog system

1 battery pair, 17Ah backup power

prodex -system battery backup calculations

Batteries:	2	Alarm state current [mA]:	2 500,00
Capacity /battery [Ah]:	17	Normal state current consumption [mA]:	218,75
Capacity [Ah]:	17,00		

	Count	Factor (due to switching)	Nominal consumption [mA]	Normal state (factorized) [mA]	Total normal consumption for item [mA]	Nominal alarm consumption [mA]	Alarm state (factorized) [mA]	Total alarm consumption for item [mA]	Notes
CIE	1	1	50	50,00	50,00	90	90,00	90,00	
MUP	1	1	45	45,00	45,00	220	220,00	220,00	Backlight on
HOAN	1	1	40	40,00	40,00	40	40,00	40,00	Only card
Transmitter	1	1	30	30,00	30,00	30	30,00	30,00	
Points	55	2	0,44	0,88	48,40	0,44	0,88	48,40	
Isolators	1	2	0,05	0,10	0,10	0,05	0,10	0,10	
Base sounders	10	2	0,25	0,50	5,00	3	6,00	60,00	Sound level 85dBA
Bells	40	1	0	-	-	25	25,00	1 000,00	F1..F3+BELL1+ EXT1..3 < 1.5A
Bell lines	4	1	0	-	-	20	20,00	80,00	BELL/EXT 1-4

Total:	218,50		1568,50
Values must be <	218,75		2 500,00

Results:
Normal state: Consumption OK

Alarm state: Consumption OK

Picture 15-3

2 battery pairs, 34 Ah backup power

prodex -system battery backup calculations

Batteries:	4	Alarm state current [mA]:	2 500,00
Capacity /battery [Ah]:	17	Normal state current consumption [mA]:	454,86
Capacity [Ah]:	34,00		

	Count	Factor (due to switching)	Nominal consumption [mA]	Normal state (factorized) [mA]	Total normal consumption for item [mA]	Nominal alarm consumption [mA]	Alarm state (factorized) [mA]	Total alarm consumption for item [mA]	Notes
CIE	1	1	50	50,00	50,00	90	90,00	90,00	
MUP	1	1	45	45,00	45,00	220	220,00	220,00	Backlight on
HOAN	2	1	40	40,00	80,00	40	40,00	80,00	Only card
Transmitter	1	1	30	30,00	30,00	30	30,00	30,00	
Points	254	2	0,44	0,88	223,52	0,44	0,88	223,52	Ion. smoke sensor
Isolators	6	2	0,05	0,10	0,60	0,05	0,10	0,60	
Base sounders	50	2	0,25	0,50	25,00	3	6,00	300,00	Sound level 85dBA
Bells	35	1	0	-	-	25	25,00	875,00	F1..F3+BELL1+ EXT1..3 < 1.5A
Bell lines	4	1	20	-	-	20	20,00	80,00	BELL/EXT 1-4

Total:	454,12		1899,12
Values must be <	454,86		2 500,00

Results:

Normal state: Consumption OK

Alarm state: Consumption OK

Picture 15-4

4 battery pairs, 68 Ah backup power

prodex -system battery backup calculations

Batteries:	8	Alarm state current [mA]:	2 500,00
Capacity /battery [Ah]:	17	Normal state current consumption [mA]:	927,08
Capacity [Ah]:	68,00		

	Count	Factor (due to switching)	Nominal consumption [mA]	Normal state (factorized) [mA]	Total normal consumption for item [mA]	Nominal alarm consumption [mA]	Alarm state (factorized) [mA]	Total alarm consumption for item [mA]	Notes
CIE	1	1	50	50,00	50,00	90	90,00	90,00	
MUP	2	1	45	45,00	90,00	220	220,00	440,00	Backlight on
HOAN	4	1	40	40,00	160,00	40	40,00	160,00	Only card
Transmitter	1	1	30	30,00	30,00	30	30,00	30,00	
Points	508	2	0,44	0,88	447,04	0,44	0,88	447,04	Ion. smoke sensor
Isolators	12	2	0,05	0,10	1,20	0,05	0,10	1,20	
Base sounders	213	2	0,25	0,50	106,50	3	6,00	1 278,00	Sound level 85dBA
Bells	1	1	0	-	-	25	25,00	25,00	F1..F3+BELL1+ EXT1..3 < 1.5A
Bell lines	1	1	0	-	-	20	20,00	20,00	BELL/EXT 1-4

Total:	884,74		2491,24
Values must be <	927,08		2 500,00

Results:

Normal state: Consumption OK

Alarm state: Consumption OK

Picture 15-5

15.2. Calculation of loop cable conductors

The ProDex loop-card (HOAN LOOP) has an output voltage of 38V (high bit) to 30V (low bit). This voltage is constant independent of the power source (battery, mains or both) of the control panel.

The HOAN LOOP card powers the loop from both loop drive and loop return sides, but if a short-circuit occurs near either loop drive or loop return the card must be able to power the entire loop.

All points connectable to the loop have a voltage range from 17V to 31V (low bit).
We count the power loss of the conductors from the low bit values, which gives us the following:

- Output from HOAN LOOP min. 29V.
- Input to the point min. 17V.

This means we can loose a maximum of 29V – 17V = **12V** to the cabling.



The loop cable distance from loop drive or loop return (choose the longest possible path) and the possible separate branch to the most distant point must be estimated. In the worst case the resistance can be max. 74Ω.
The worst case is always when the loop is powered only from one side (drive or return), in which case the signal path is longer.

The power output from the HOAN LOOP-card is 400 mA maximum
*50 mA is reserved for LED use, that leaves **350 mA for the points in the loop**.*
This means that the simultaneous power consumption of the points must be less then 350 mA.

The power consumption of the loop is calculated by adding the power consumption unit values of all points attached to the loop. See Analog loop points. for current consumption values.

This calculated value must not exceed 7000 (power consumption in 50µA units), 350 mA.

Sensors:
Their power consumption is the same regardless if alarm state or not (the power consumption of the possible alarm led is already taken in consideration with the reserved power).

Normal base or short circuit isolator base:
Their power consumption is the same regardless if alarm state or not.

Base sounders:
Their power consumption in alarm state depends on to which level the sound is set to. E.g. 85 dB =3 mA/ 60 units, 95 dB = 11 mA/ 220 units. The value is selected according to the sound level selection. The normal power consumption isn't added to this value.

Other devices:
Their power consumption values are given when the device is in alarm state.

How to use the graphs:

The cable conductor pair diagram is scaled with power consumption units. 1 unit is 50µA current.

The cable type used to calculate the graphs is KLMA. The diameter of the conductors is 0.8 mm. The conductor pair loop resistance of this cable is 74Ω / km.

- Count the power consumption units.
- If the points on the loop are placed on equal distance from each other choose the graph equal distance. Otherwise choose the one where the sensors are placed at the end of the loop (this is the worst case).
- Estimate the loop cable distance from loop drive or loop return (choose the longest possible path) and the possible separate branch to the most distant point. In the worst case the resistance can be max. 74Ω. The worst case is if a short circuit occurs and the loop is powered by the other side, in which case the signal path is longer.

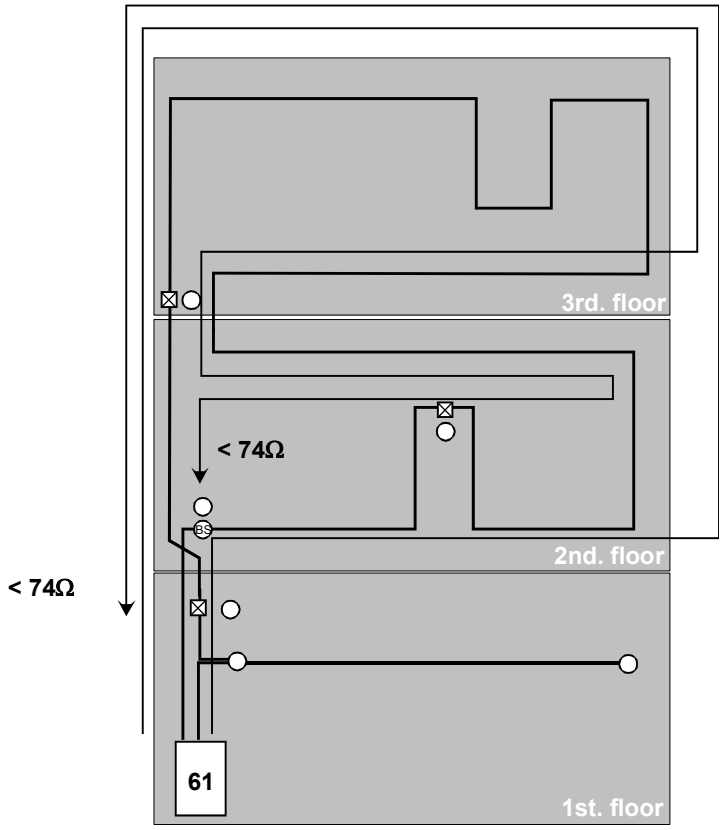

Picture 15-6

- Define the crossing point of the power consumption units and the estimated cable length in the graph.
- If the crossing point isn't under the curve, see the next graph where the conductor pairs for the loop are doubled.

Example how to calculate power consumption units an choose a proper cable:

We have a 3 floors high building. The control panel is placed on the first floor.
We use a main cable, which runs from the first floor (control panel) to the third floor. This loop returns with another conductor pair.
From this main cable we have a branch to the first floor points (because the point count is less then 32.
The points in the loop are placed so that we can assume that they are placed on equal distance from each other.

- On the first floor we have:
  - 20 AIE-E (Ionisation smoke sensor).
  - 5 ACA-E (Multi sensor).
  - 5 ATG-E (Heat sensor).
  - 2 YBO-R/SCI (Short circuit isolator mounting base).
  - 1 CHQ-BS (mounting base with sounder).
  - 27 YBN-R/3 (Mounting base).

- On the second floor we have:
  - 25 AIE-E (Ionisation smoke sensor).
  - 10 ATG-E (Heat sensor).
  - 10 ALG-E (Photoelectric smoke sensor).
  - 2 YBO-R/SCI (Short circuit isolator mounting base).
  - 3 CHQ-BS (mounting base with sounder).
  - 40 YBN-R/3 (Mounting base).

- On the third floor we have:
  - 15 ALG-E (Photoelectric smoke sensor).
  - 5 ATG-E (Heat sensor).
  - 2 YBO-R/SCI (Short circuit isolator mounting base).
  - 2 CHQ-BS (mounting base with sounder).
  - 16 YBN-R/3 (Mounting base).

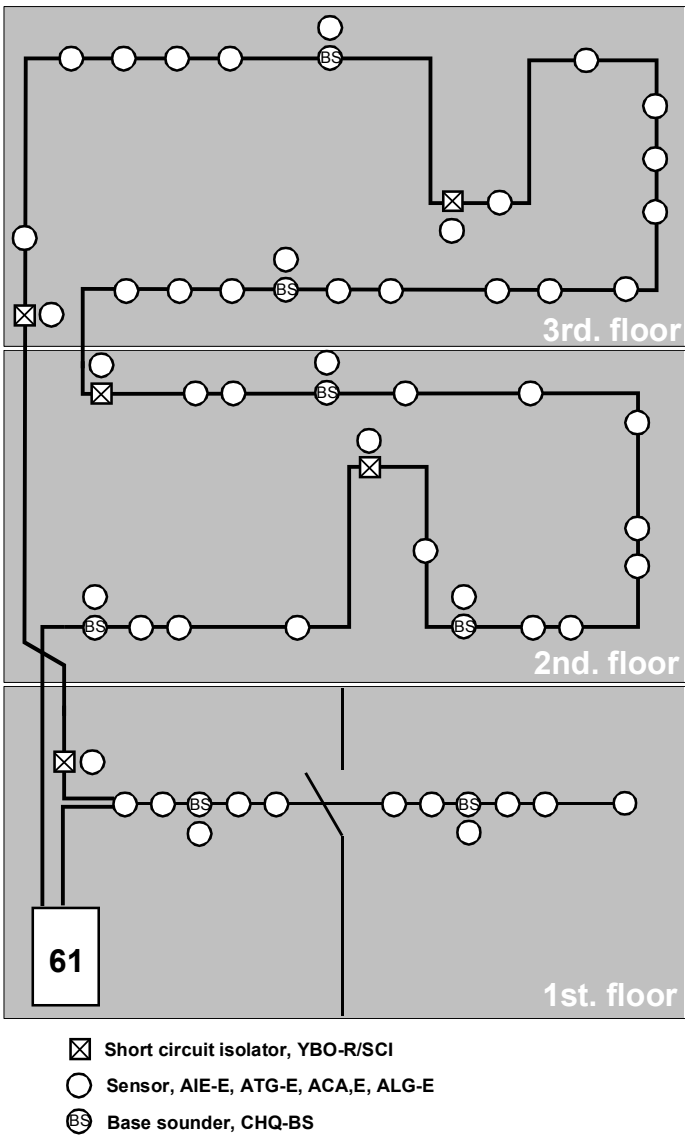
BS
3rd. floor
2nd. floor
1st. floor
61
Short circuit isolator, YBO-R/SCI
Sensor, AIE-E, ATG-E, ACA,E, ALG-E
Base sounder, CHQ-BS

Picture 15-7

Calculations:

Sensors:

- 45 AIE-E (Ionisation smoke sensor). The unit is 9.
- 5 ACA-E (Multi sensor). The unit is 10.
- 20 ATG-E (Heat sensor). The unit is 8.
- 25 ALG-E (Photoelectric smoke sensor). The unit is 8.

Normal base or short circuit isolator base:

- 6 YBO-R/SCI (Short circuit isolator mounting base). The unit is 1.
- 83 YBN-R/3 (Mounting base). The unit is 0.

Base sounders:

- 6 CHQ-BS (mounting base with sounder, set at 95 dB). The unit is 220.

Other devices:
No other devices are attached to the loop.

The formula is:

Units [@50µA]= (unit device 1 * n) + (unit device 2 * n) + (unit device 3 * n) + (unit device x * n) + (base type 1 * n) + (base type 2 * n) + (sounder base * n)

Where c = count of specific type.

Units [@50µA]= (45 * 9) + (5 * 10) + (20 * 8) + (25 * 8) + (6 * 1) + (83 * 0) + (6 *220)

Multiply the consumption units with the device count. Add these different sums together.

The total current consumption units for the loop are 2141.

This means that this system where the total loop cable distance is anything between 1 and 850m can be realised with one conductor pair, regardless if the points are placed on equal distance or if they are “at the end of the loop”.

15.2.1. 1 Conductor pair

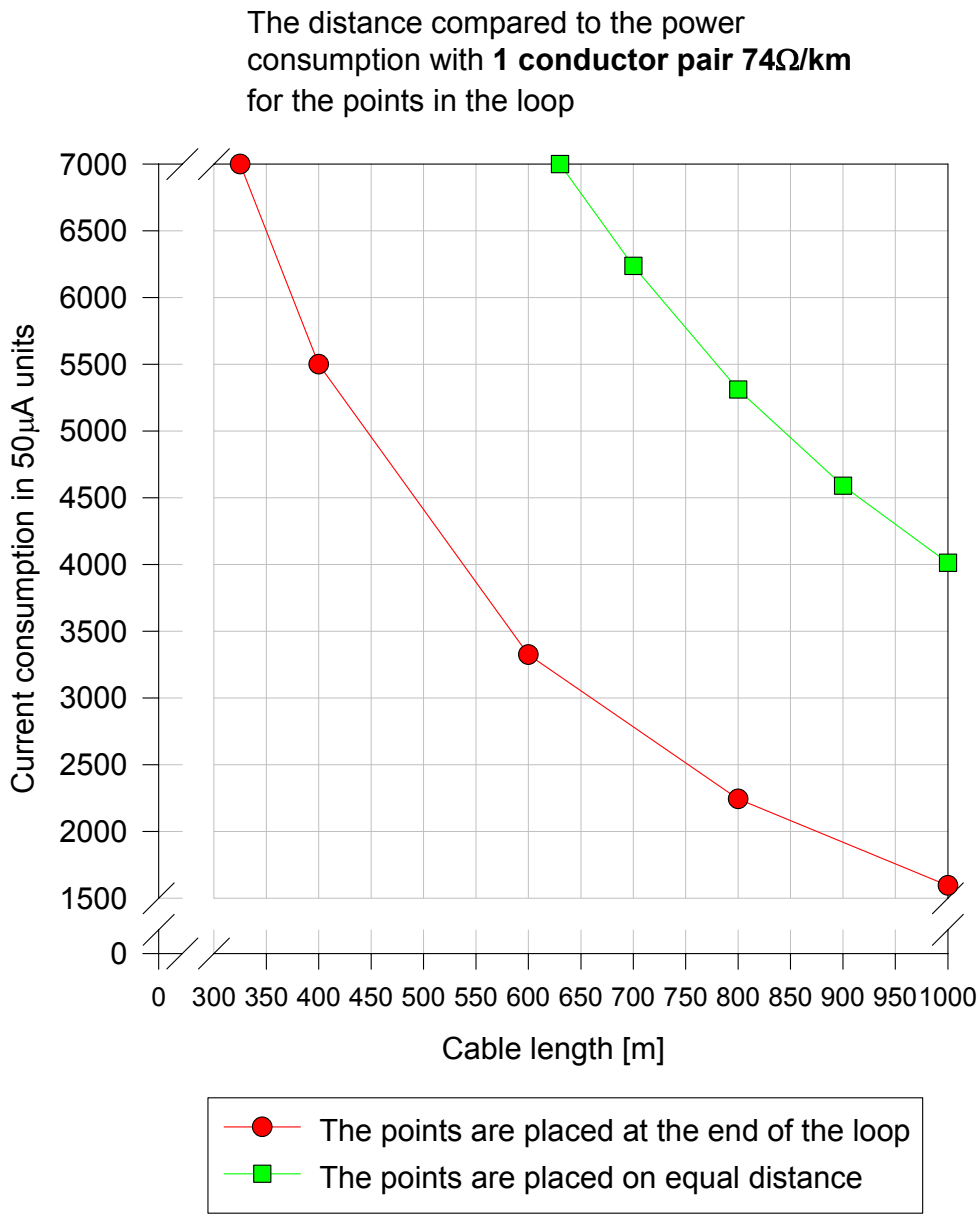

Picture 15-8

15.2.2. 2 Conductor pairs

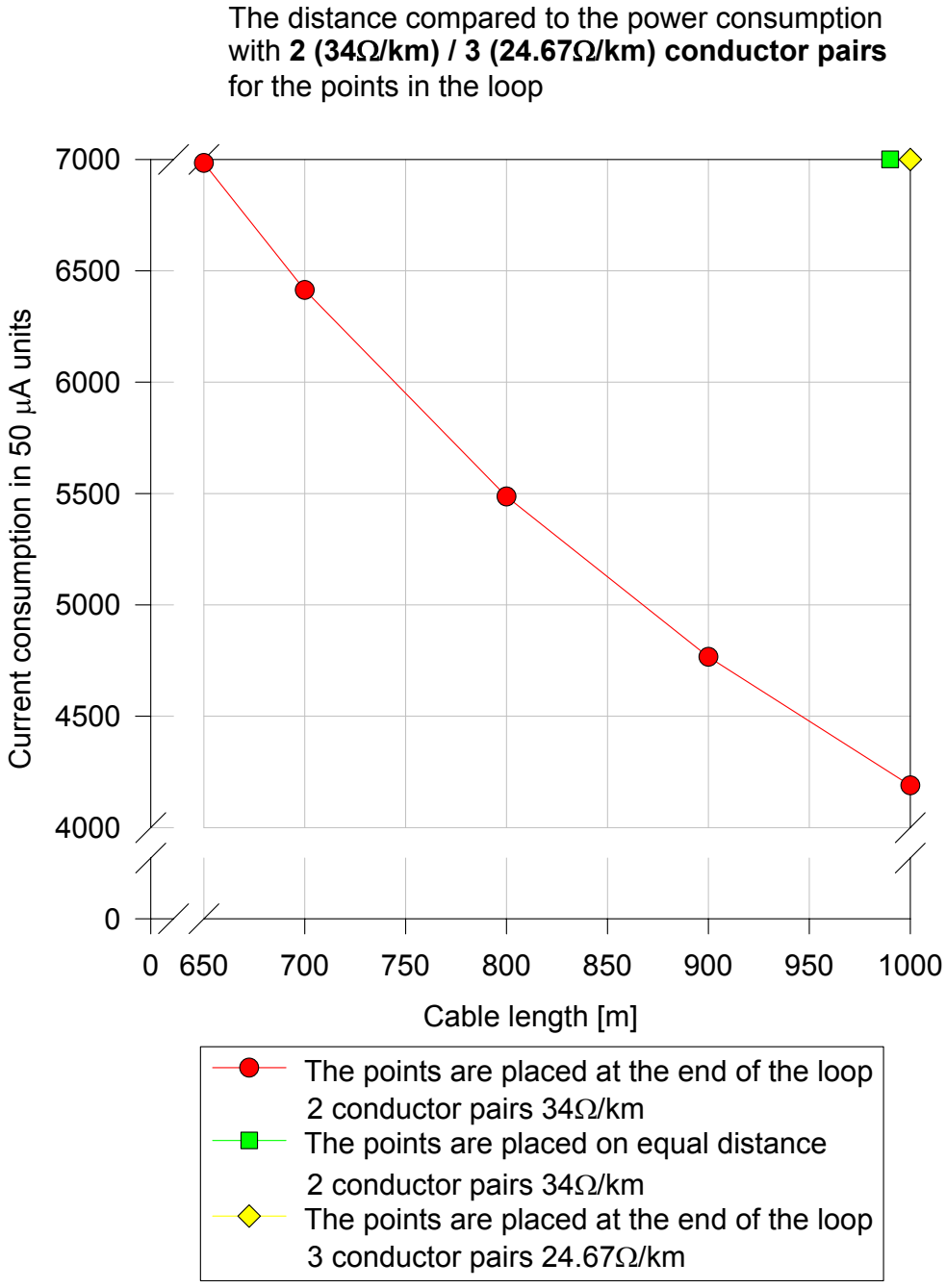

Picture 15-9